MICROFILMED
NOV 5 1992

DESIGN EXCEPTION APPROVED
Horizontal Clearance 2-16-89
(Bridge Width)

STATE OF OHIO
DEPARTMENT OF TRANSPORTATION
LIC-37-15.61
LIC-16-14.26
GRANVILLE & NEWARK TOWNSHIPS
CITY OF NEWARK & VILLAGE OF GRANVILLE
LICKING COUNTY

CALC. BY	D.M.
DATE	1-3-89
CHECK. BY	J.W.C.
DATE	1-18-89

LIC-37-15.61 LIC-16-14.26	OHIO
	FHWA REGION 5
F-29 (48)	FEDERAL PROJECT

1/123

594 (89)

DESIGN DESIGNATION

		S.R.37	S.R.16
Current Year ADT (1989)	=	8,570	20,980
Design Year ADT (2009)	=	12,000	29,380
D H V (2009)	=	1,440	3,525
D (Directional Distribution)	=	Equal	Equal
T (Percent B & C Trucks)	=	8%	7%
V (Design Speed)	=	60 M.P.H.	60 M.P.H.
Legal Speed	=	55 M.P.H.	55 M.P.H.
Functional Classification	=	Rural Expressway	Rural Expressway

LIMITED ACCESS

This improvement is especially designed for through traffic and has been declared a limited access highway or freeway by action of the Director in accordance with the provisions of Section 5511.02 of the Revised Code of Ohio.

CONVENTIONAL SIGNS

County Line
Township Line
Section Line
Corporation Line
Fence Line (existing) (proposed)
Center Line
Trees, Stumps, (to be removed)
Utility Poles: Telephone, Power, Light

Limited Access (only) — LA
Right of Way (only) — RW
Limited Access & Right of Way — LA&RW
Existing Right of Way
Property Line (in existing fence)
Railroad or
Guardrail (existing) (proposed)
Detour

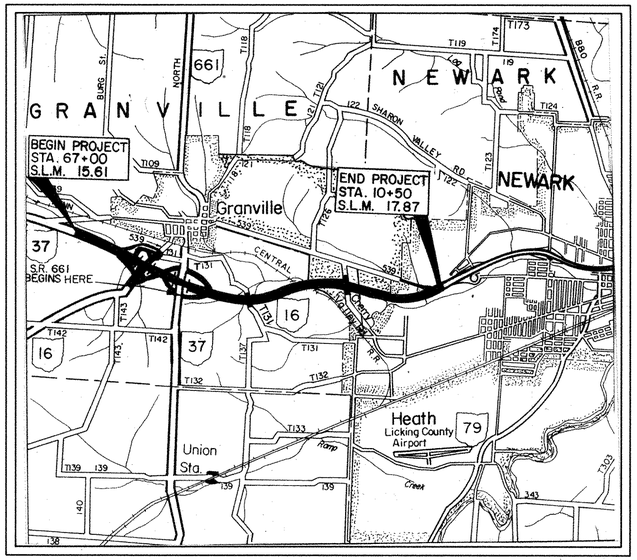

LOCATION MAP

SCALE IN MILES
0 1 2 3 4

Portion to be Improved
State & Federal Routes
Other Roads

SCALES

Plan (SHEETS 28,29 & 51) 0' 100' 200'
Plan (SHEET 30) 0' 50' 100'
Plan (SHEETS 36-38 & 46) 0' 20' 40'

F-29 (48)

1989 SPECIFICATIONS

The standard specifications of the State of Ohio, Department of Transportation, including changes and supplemental specifications listed in the proposal shall govern this improvement.

I hereby approve these plans and declare that the making of this improvement will require the part time closing of the highway to traffic, as noted on Sheet 9, during which time detours will be provided as shown hereon. Provisions for the maintenance and safety of traffic will be as set forth on the plans and estimates.

MICROFILMED
SEP 13 1993

INDEX OF SHEETS

TITLE SHEET — 1
SCHEMATIC PLAN — 2
TYPICAL SECTIONS — 3&4
EMBANKMENT LIMITS — 5
GENERAL NOTES — 5 A, 6-8
MAINTENANCE OF TRAFFIC NOTES AND DETAILS — 9-12, 11A-B
TYPICAL DETAILS & NOTES — 13-24, 20A
GENERAL SUMMARY — 25-27
PLAN SHEET S.R.16 AND S.R.37 INTERCHANGE — 28
PLAN SHEET S.R.37, 661 AND S.R. 16 INTERCHANGE — 29
DETAILS T.R. 131 — 30-35
DETAILS S.R.16 AND CHERRY VALLY ROAD — 36-50
PLAN SHEET GRANVILLE RD. INTERCHANGE — 51
PAVEMENT AND SHOULDER DATA SHEETS — 52-61
TRAFFIC CONTROL — 62 & 63
TRAFFIC CONTROL SUB-SUMMARY — 64
SIGN DETAILS — 65-67
SIGNING SUB-SUMMARY — 68 & 69
PAVEMENT MARKING SUB-SUMMARY — 70 & 71
TEMPORARY PAVEMENT MARKINGS — 72
DRAINAGE SUB-SUMMARY — 73
DRAINAGE DETAILS — 74-89
BRIDGE DETAIL SHEETS — 90-115
TYPICAL MAINTENANCE OF TRAFFIC SHEETS 115-A, 116-123

OMITTED SHEET NOS 22, 23.

Sht. 90 revised 9-25-89 RCI

LINE DATA

S.R. 37:
BEGIN PROJECT STA. 67+00
END PROJECT STA. 93+47.02
LENGTH OF PROJECT = 2647.02 LIN.FT. or 0.501 MILE
BEGIN WORK STA. 57+90
END WORK STA. 93+47.02
LENGTH OF WORK = 3557.02 LIN. FT. or 0.674 MILE

S.R. 16:
BEGIN PROJECT STA. 93+47.02
EQUATION: STA. 283+89.68 BACK = STA. 10+00 AHEAD
END PROJECT STA. 10+50
LENGTH OF PROJECT = 19,092.66 LIN.FT. or 3.616 MILE
BEGIN WORK STA. 93+47.02
EQUATION: STA. 283+89.68 BACK = STA. 10+00 AHEAD
END WORK STA. 22+83
ADD FOR GRANVILLE ROAD CONNECTION
BEGIN WORK STA. 263+00
END WORK STA. 270+86.63
LENGTH OF WORK = 786.63 LIN. FT. or 0.149 MILE
LENGTH OF WORK = 21,112.29 LIN.FT. or 3.998 MILE

NET LENGTH OF PROJECT = 21,739.68 LIN.FT. or 4.117 MILE
NET LENGTH OF WORK = 24,669.31 LIN.FT. or 4.672 MILE

UNDERGROUND UTILITIES
TWO WORKING DAYS
BEFORE YOU DIG
Call 800-362-2764 (Toll Free)
OHIO UTILITIES PROTECTION SERVICE
NON-MEMBERS
MUST BE CALLED DIRECTLY

Plan Prepared By:
DISTRICT NO.5
OHIO DEPARTMENT OF TRANSPORTATION

SUPPLEMENTAL SPECIFICATIONS

		941	5-28-87
931	6-18-85	940	6-10-87
802	5-4-88	942	10-29-86
847	10-17-83	944	6-24-89
947	10-17-83	862	12-16-88
836	11-12-85	962	12-16-88
850	5-31-88		

SUPPLEMENTAL PRINTS OF STANDARD CONSTRUCTION DRAWINGS

BP-1	6-1-65	GR-6A	2-5-82	TC-35.10	8-29-84	TC-18.26	5-31-79	CB-5	11-10-83
BP-3	12-6-76	MC-9	1-30-84	MT-97.10	4-29-88	TC-22.20	3-1-79	CB-8	11-10-83
BP-4	10-1-87	MC-9A	1-11-85	MT-99.10	11-14-86	TC-51.10	1-20-84	CB-2-2A&B	5-1-79
BP-5	10-1-87	MC-11	8-1-78	MT-99.20	4-29-88	TC-51.11	1-20-84	I-2	12-18-84
BP-7	10-1-87	MC-6	1-30-84	TC-61.10	4-5-82	TC-41.10	8-29-84	MH-1	12-18-84
				TC-65.10	2-26-82	TC-42.10	8-19-77	MH-3	12-18-84
GR-1	1-11-85			TC-65.11	4-5-82	TC-42.20	3-26-79	MC-4	7-26-76
GR-2B	2-5-82			TC-71.10	4-9-79	TC-52.10	4-3-79	MH-5	6-12-75
GR-3	1-21-85			TC-72.20	2-26-82	TC-52.20	4-3-79	EXJ-4-87	1-5-87
GR-3A	2-5-82			TC-82.10	8-29-84	TC-41.20	3-26-79	BR-1	5-29-79
GR-4	2-5-82			HL-30.11	5-1-87				
GR-4A	1-30-84							SD-1-69	6-12-69
GR-5	2-5-82								
GR-6	2-5-82								

Rev. 9-25-89

Approved John N. Hagar
Date 1-24-89 District Deputy Director of Transportation

Approved B. D. Hamblenne
Date 3-29-89 Engineer, Bureau of Bridges and Structural Design

Approved Theodore J. Stitt
Date 5/25/89 Chief Engineer, Planning & Design

Approved Bernard B. Hunt
Date 5/25/89 Director, Department of Transportation

REVISED 7-18-89

DEPARTMENT OF TRANSPORTATION
FEDERAL HIGHWAY ADMINISTRATION
APPROVED

DIVISION ADMINISTRATOR DATE

Project LIC-37-15.61 LIC-16-14.26
Date of Letting _____ 19__ Contract No. _____

MICROFILMED
NOV 5 1992

SCHEMATIC PLAN

CALC. BY O.M.
DATE 1-3-89
CHECK. BY J.W.C.
DATE 1-18-89

FHWA REGION	STATE	PROJECT	
5	OHIO		

LIC-37-15.61
LIC-16-14.26

PROJECT DESCRIPTION

THIS PROJECT SHALL CONSIST OF THE REMOVAL OF THE EXISTING ASPHALT CONCRETE SUFACE COURSE, CRACK AND SEAT THE EXISTING CONCRETE PAVEMENT AND THE PLACEMENT OF 3 3/4 INCHES BITUMINOUS AGGREGATE BASE, AND 1 1/4 INCHES ASPHALT CONCRETE SURFACE COURSE TYPE 1. WHEN APPLICABLE THE EXISTING PAVEMENT UNDER THE OVERHEAD STRUCTURES SHALL BE REMOVED AND REPLACED WITH FULL DEPTH ASPHALT CONCRETE PAVEMENT. THIS PROJECT WILL ALSO INCLUDE REMOVAL OF THE EXISTING GUARDRAIL AND INSTALLATION OF NEW TYPE 5 GUARDRAIL WITH ANCHOR ASSEMBLIES THE SHOULDER SLOPES SHALL BE CONSTRUCTED TO THE GRADES SHOWN AND SEEDED, AND REPAIR EXISTING OVERPASSES.

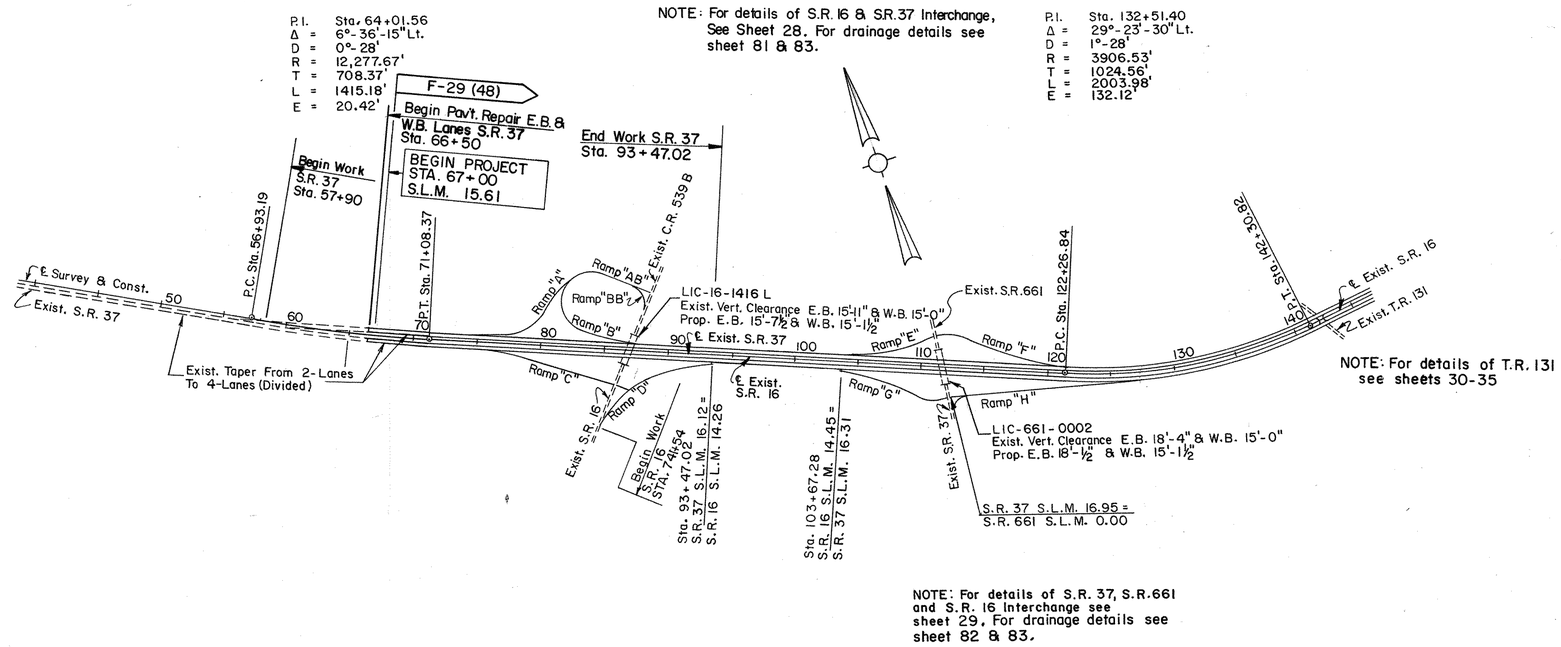

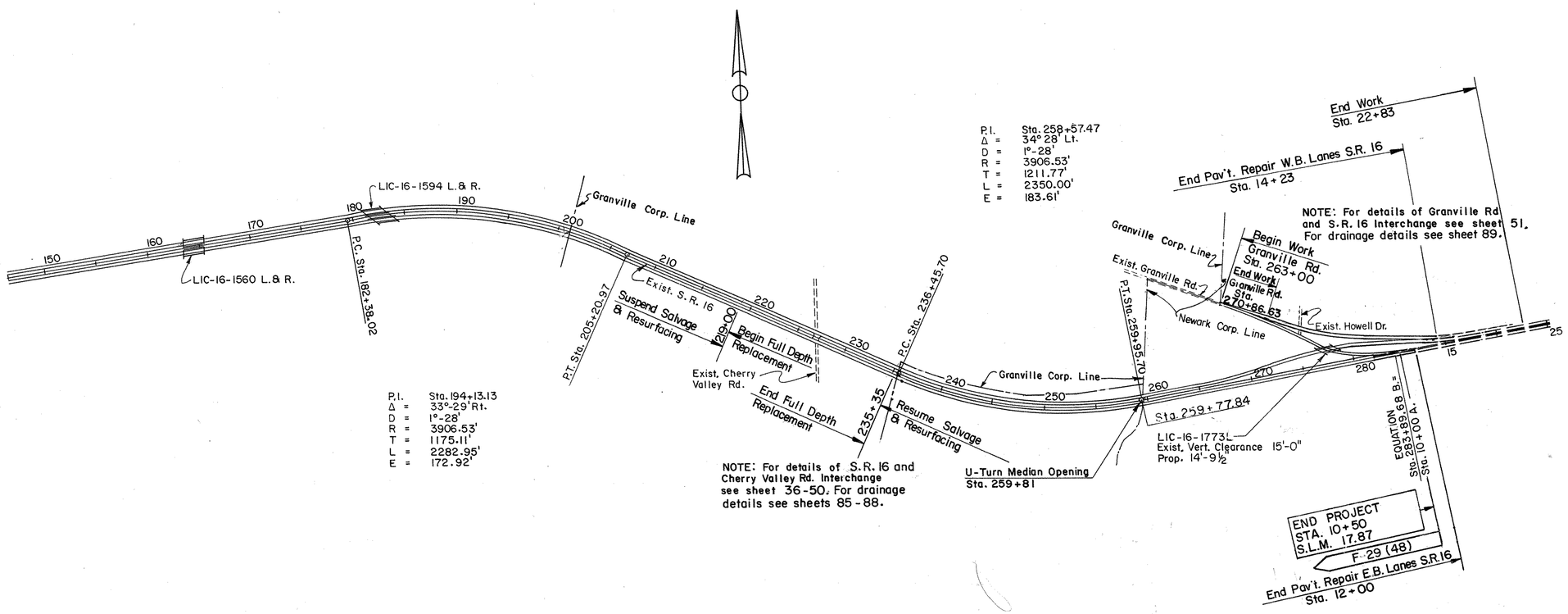

TYPICAL SECTIONS

TYPE 446

FHWA REGION	STATE	PROJECT	
5	OHIO		

3/123

LIC-37-15.61
LIC-16-14.26

CALC. BY D.M.
DATE 1-3-89
CHECK. BY J.W.C.
DATE 1-18-89

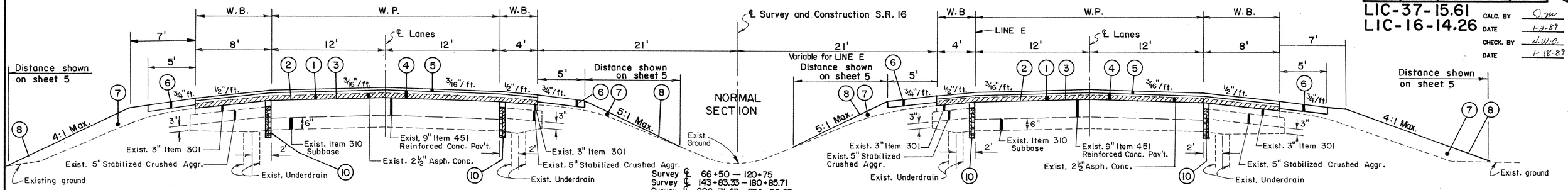

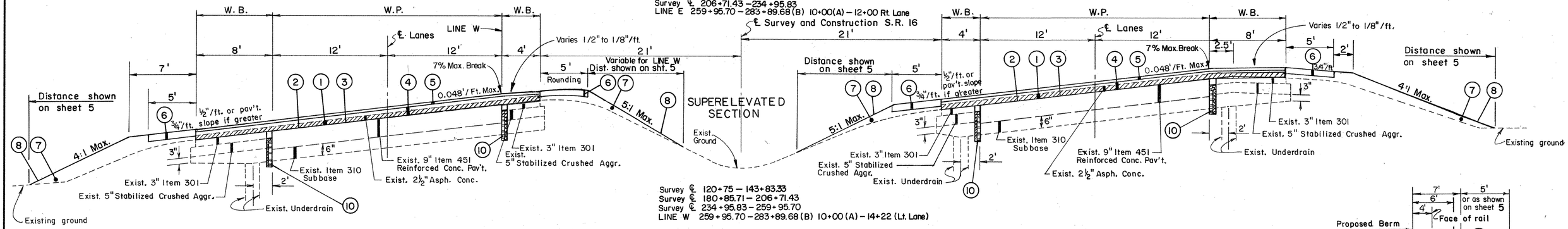

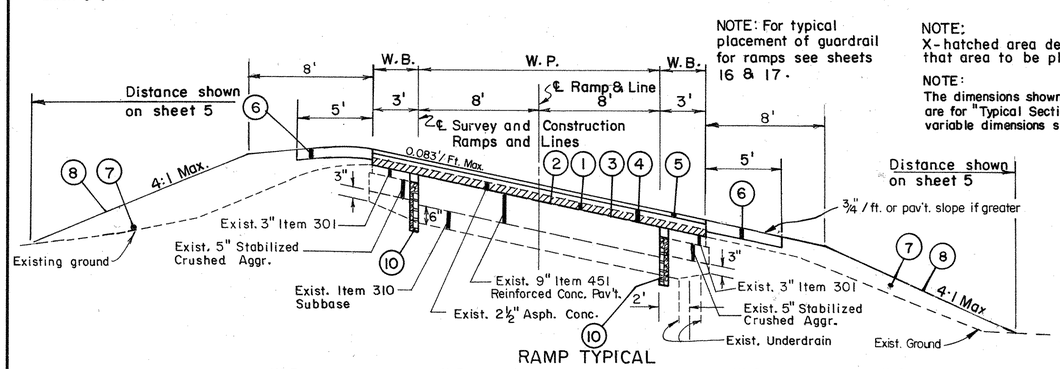

RAMP TYPICAL

RAMP A 75+14.94 — 83+25
RAMP B 79+54 — 87+00
RAMP BB 87+86.51 — 92+37.15
RAMP C 73+73.37 — 86+42.91
RAMP DD Variable
RAMP D 83+09.71 — 95+08.92
RAMP E 104+40 — 111+20.13
RAMP F 110+86.32 — 121+00
RAMP G 100+70 — 112+44.6
RAMP H 112+18.72 — 127+75.21
LINE A 270+86.55 — 283+55
LINE B 271+74.11 — 283+89.68

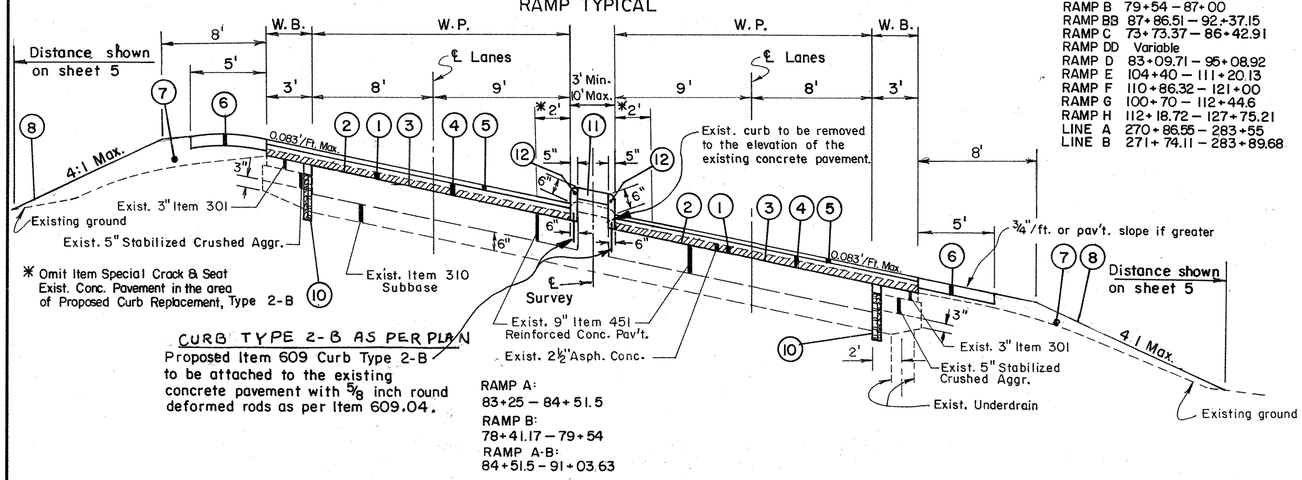

CURB TYPE 2-B AS PER PLAN

Proposed Item 609 Curb Type 2-B to be attached to the existing concrete pavement with 5/8 inch round deformed rods as per Item 609.04.

RAMP A:
83+25 — 84+51.5
RAMP B:
78+41.17 — 79+54
RAMP A-B:
84+51.5 — 91+03.63

RAMP TYPICAL

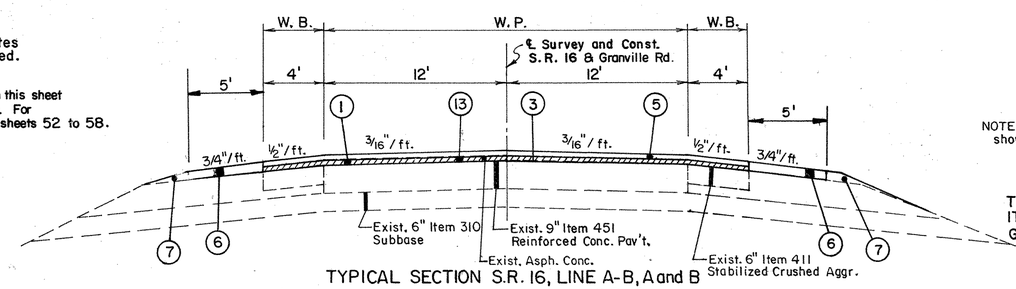

TYPICAL SECTION S.R. 16, LINE A-B, A and B

741+54 — 747+29.81 S.R. 16
749+75.89 — 754+65 S.R. 16
LINE A-B 263+00 Granville Rd. — 271+74.11 LINE B
270+86.55 LINE A

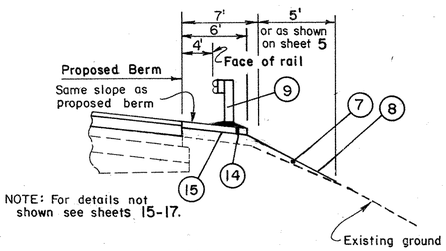

NOTE: For details not shown see sheets 15-17.

TYPICAL PLACEMENT OF GUARDRAIL AND ITEM 203 EMBANKMENT, AS PER PLAN FOR GUARDRAIL SECTIONS MAINLINE

MARK	ITEM	DESCRIPTION
14	404	2" Asphalt Concrete, AC-20
15	408	Bituminous Prime Coat, As Per Plan (See General Note)
1	254	Pavement Planing, Bituminous
2	Special	Cracking and Seating Existing 451 Rigid Pavement (See Proposal Note).
3	407	Tack Coat
4	301	3¾" Bituminous Aggregate Base, AC-20 or as shown on sheet 51 Line A.
5	446	1¼" Asphalt Concrete Surface Course, Type 1, AC-20
6	617	4" Compacted Aggregate, Type A
7	203	Embankment, As Per Plan (See General Note).
8	659	Seeding And Mulching.
9	606	Guardrail, Type 5, As Per Plan (See General Note)
10	605	Shallow Underdrains, As Per Plan (See Drainage Detail Sheets)
11	612	4" Concrete Median
12	609	Curb, Type 2-B. AS PER PLAN
13	301	2½" Bituminous Aggregate Base, AC-20 S.R. 16 and 3¾" on Line A-B.

TYPICAL SECTIONS

FHWA REGION	STATE	PROJECT	
5	OHIO		

LIC-37-15.61
LIC-16-14.26

CALC. BY D.M.
DATE 1-3-89
CHECK. BY W.W.C.
DATE 1-18-89

TYPICAL SECTION OF EXISTING PAVEMENT

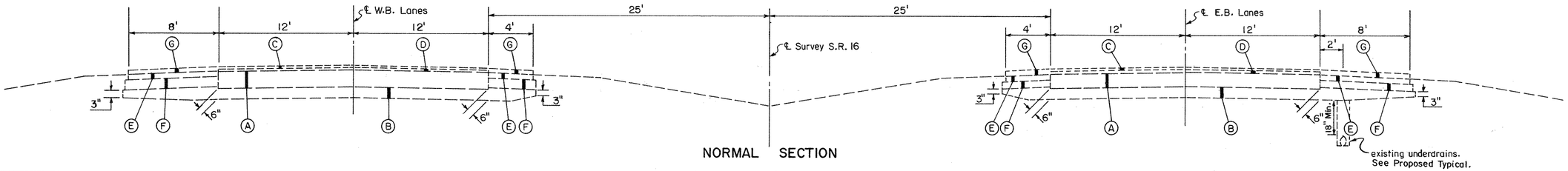

NORMAL SECTION

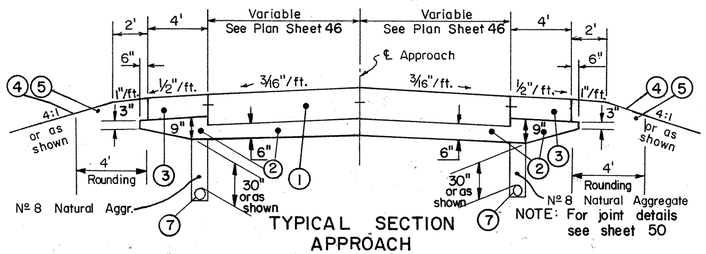

TYPICAL SECTION APPROACH

NOTE: For joint details see sheet 50

MARK	EXISTING LEGEND
A	Existing 9" Item 451 Reinforced Concrete Pavement
B	Existing 6" or as shown, Item 310 Subbase
C	Existing 1¼" Item 848 Asph. Conc. Surface Course
D	Existing 1¼" Item 848 Asph. Conc. Intermediate Course
E	Existing 3" Item 301 Bit. Aggr. Base
F	Existing 5" Item 411 Stabilized Crushed Aggregate
G	Existing 2½" Item 848 Asph. Conc. Surface Course
H	Existing 1¾" Item 848 Asph. Conc. Intermediate Course
I	Existing 7" Item 301 Bit. Aggr. Base
J	Existing 2¾" Item 301 Bit. Aggr. Base
K	Existing 4" Item 304 Aggregate Base

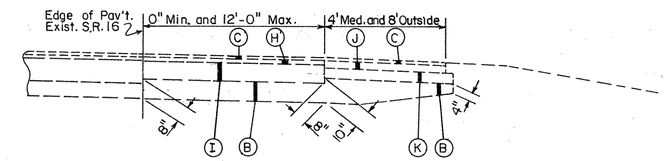

TYPICAL SECTION TURN LANE

TYPICAL SECTIONS OF PROPOSED PAVEMENT

ITEM 452 on ITEM 304

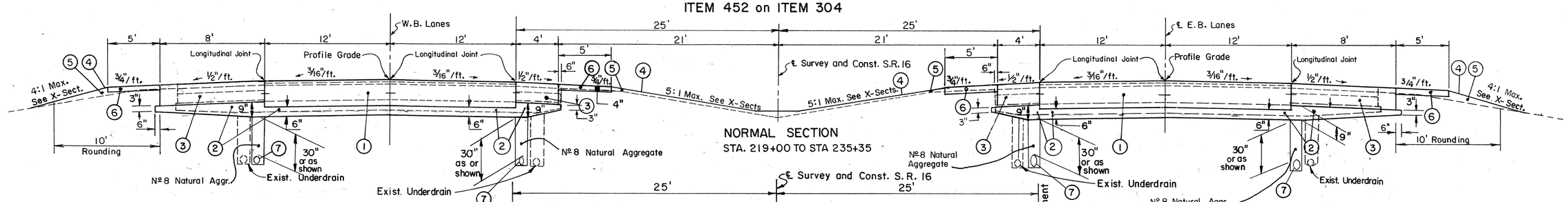

NORMAL SECTION
STA. 219+00 TO STA 235+35

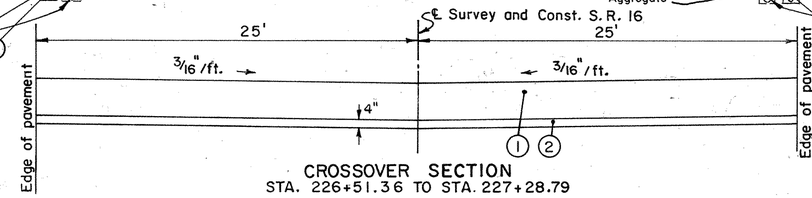

CROSSOVER SECTION
STA. 226+51.36 TO STA. 227+28.79

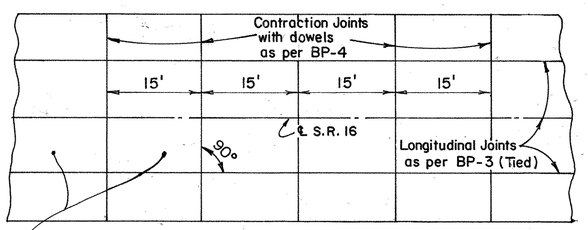

The pavement shall be finished in accordance with Section 451.09 of the Specifications.

TYPICAL PLACEMENT OF JOINTS
(For Variables See Plan Sheet 50)

MARK			
1	ITEM	452	15" PLAIN CONCRETE PAVEMENT, AS PER PLAN
2	ITEM	304	AGGREGATE BASE
3	ITEM	452	12" or 15" (as shown on sheet 50) PLAIN CONCRETE PAVEMENT, AS PER PLAN
4	ITEM	659	SEEDING AND MULCHING
5	ITEM	203	EMBANKMENT, AS PER PLAN
6	ITEM	617	4" COMPACTED AGGREGATE, TYPE A
7	ITEM	605	6" PIPE UNDERDRAINS, AS PER PLAN

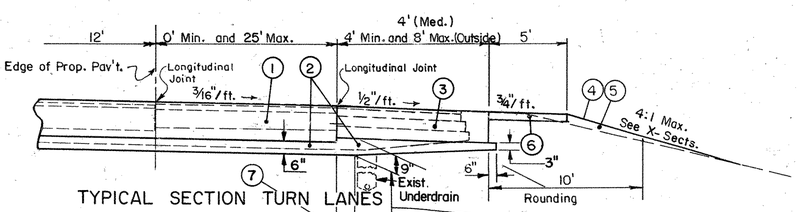

TYPICAL SECTION TURN LANES

STA. 219+00 E.B. - STA. 226+55.82 E.B. RT. SIDE
STA. 222+50 E.B. - STA. 226+51.36 E.B. LT. SIDE
STA. 227+28.79 E.B. - STA. 227+72.29 E.B. LT. SIDE
STA. 225+94.65 W.B. - STA. 226+51.36 W.B. RT. SIDE
STA. 227+28.79 W.B. - STA. 233+50 W.B. RT. SIDE
STA. 227+13.99 W.B. - STA. 229+75.99 W.B. LT. SIDE

EMBANKMENT LIMITS

TYPICAL PLACEMENT OF EMBANKMENT MEDIAN SIDE & OUTSIDE EDGE OF PAVEMENT. (SEE SHEET 3).

DISTANCE LEFT	DISTANCE LEFT	STATION ℄ SURVEY	DISTANCE RIGHT	DISTANCE RIGHT
73	6	67+00	11	69
73	6	70+00	11	69
81		72+50		80
78	9	75+00	13	76
91		77+50		97
72	12	80+00	7	71
68		82+50		72
92	13	85+00	13	70
SEE CONCRETE BARRIER		87+50		66
86	11	90+00	11	74
67		92+50		104
85	7	95+00	10	85
89		97+50		78
78	7	100+00	14	79
81		102+50		88
83	10	105+00	12	70
66		107+50		70
70	8	110+00	10	69
71		112+50		66
71	8	115+00	11	71
68		117+50		70
91	10	120+00	5	69
83		122+50		66
70	3	125+00	7	90
70		127+50		82
71	11	130+00	11	79
70		132+50		72
68	10	135+00	6	70
69		137+50		69
68	11	140+00	SEE TWP.RD.131	131
	SEE TWP.RD.131	142+50	SEE TWP.RD.131	131
69	SEE TWP.RD.131	145+00	13	69
69	14	147+50	9	69
69	3	150+00	6	69
69		152+50		69
69	11	155+00	9	69
69		157+50		69
69	12	160+00	6	69
69		162+50		69
69		167+50		69
69	7	170+00	7	69
69		172+50		69
69	6	175+00	6	69
69		177+50		69
69	12	180+00	13	69
69	10	185+00	12	69
69		187+50		69
69	11	190+00	12	69
69		192+50		69
69	11	195+00	11	69
69		197+50		69
69	13	200+00	13	69
69		202+50		69
69	5	205+00	10	69
69		207+50		69
69	13	210+00	13	80
69		212+50		81
68	12	215+00	13	69
68		217+50		67
		219+00 – 235+35 CARRIED WITH CHERRY VALLEY RD.		
70		237+50		78
69	12	240+00	12	70
69		242+50		69
69	13	245+00	9	72
70		247+50		69
69	12	249+50	10	69
69		252+50		69
69	11	255+00	13	69
69		257+50		69
69	13	259+50	10	69

TYPICAL PLACEMENT OF EMBANKMENT MEDIAN SIDE & OUTSIDE EDGE OF PAVEMENT. (SEE SHEET 3).

DISTANCE LEFT	DISTANCE LEFT	DISTANCE LEFT	STATION ℄ SURVEY	DISTANCE RIGHT	DISTANCE RIGHT
			LINE E		
	93		262+50	44	
99	33	20	265+00	44	
112			267+50	39	
126	70	19	270+00	32	
150			272+50	43	
186	114	15	275+00	42	
		17	277+50	44	
183	124	14	280+00	44	
	97	38	282+50	40	
			283+89.68B		
			10+00 A		
			10+50	38	
			RAMP A		
		13	80+00	40	
		13	82+00	34	
		13	84+00	57	
			RAMP A–B		
		32	86+00	39	
		42	88+00	36	
		32	90+00	34	
		32	90+50	32	
			LINE B–B		
		30	90+00	14	
		29	91+00	13	
			RAMP B		
		12	80+00	25	
		13	82+00	32	
		14	84+00	29	
			RAMP C		
			76+00	13	
		28	78+00	30	
		32	80+00	30	
		32	82+00	13	
		28	84+00	12	
		28	86+00	12	
			RAMP D		
		29	88+00	13	
		50	90+00	13	
		30	92+00	14	
			94+00	20	
			RAMP E		
		21	106+00		
		23	108+00	35	
		13	110+00	51	
		13	110+50	29	
			RAMP F		
		10	112+00	35	
		13	114+00	32	
		15	116+00	30	
		21	118+00	29	
		22	120+00		
			RAMP G		
			104+00	13	
		30	106+00	14	
		36	108+00	14	
		36	110+00	16	
		33	112+00	13	

TYPICAL PLACEMENT OF EMBANKMENT MEDIAN SIDE & OUTSIDE EDGE OF PAVEMENT. (SEE SHEET 3).

DISTANCE LEFT	STATION ℄ SURVEY	DISTANCE RIGHT
	RAMP H–H	
29	2+50	11
29	3+00	13
	RAMP H	
39	113+00	13
25	114+00	24
29	116+00	8
25	118+00	9
45	120+00	12
33	122+00	14
	LINE A	
24	268+00	27
30	270+00	32
10	272+00	35
	274+00	34
13	276+00	29
8	278+00	30
	LINE B	
13	273+00	25
	275+00	27
12	276+00	30
14	278+00	27
12	280+00	30
13	282+00	24
15	283+89	

NOTE:

ALL DIMENSIONS ARE SUBJECT TO ADJUSTMENT BY THE PROJECT ENGINEER AT THE TIME OF CONSTRUCTION.

L0161422

GENERAL NOTES

LIC-37-15.61
LIC-16-14.26

EDGEDRAIN RESEARCH

THE PROPOSED "OUTSIDE EDGE" SHALLOW UNDERDRAIN RUNS FROM STATION 142+75 LEFT TO STATION 162+62 LEFT, AND STATION 143+25 RIGHT TO STATION 162+41 RIGHT (NOTED ON SHEETS 76 AND 78) ARE PART OF A RESEARCH PROJECT BEING CONDUCTED BY THE OHIO DEPARTMENT OF TRANSPORTATION AND THE U.S. GEOLOGICAL SURVEY. AT LEAST ONE (1) WEEK PRIOR TO INSTALLATION OF THESE UNDERDRAIN RUNS, THE CONTRACTOR SHALL NOTIFY THE PROJECT ENGINEER OF THE PROPOSED INSTALLATION DATES. THE ENGINEER SHALL THEN NOTIFY THE OHIO DEPARTMENT OF TRANSPORTATION CENTRAL OFFICE, BUREAU OF LOCATION AND DESIGN (MISTERS JOHN HERL, JOHN HURD, OR ROGER GREEN (614)466-3418). A REPRESENTATIVE OF THE BUREAU OF LOCATION AND DESIGN SHALL BE PRESENT DURING INSTALLATION OF THESE RUNS.

AFTER INSTALLATION OF THE UNDERDRAIN, THE U.S. GEOLOGICAL SURVEY WILL INSTALL MONITORING EQUIPMENT AT THE OUTLETS OF THE FOUR UNDERDRAIN RUNS WITHOUT PRECAST CONCRETE OUTLETS. THE CONTRACTOR SHALL COOPERATE WITH THE U.S.G.S. PERSONNEL BY ARRANGING HIS WORK SCHEDULE TO FACILITATE THE INSTALLATION OF MONITORING EQUIPMENT.

(FOR INSTALLATION DETAILS SEE SHT. NO. 74)

ITEM SPECIAL SAWING

AFTER INSTALLATION OF MONITORING EQUIPMENT ON THE FOUR UNDERDRAIN RUNS BY THE U.S. GEOLOGICAL SURVEY PERSONNEL, THE CONTRACTOR SHALL SAW AN 1/8" WIDE CRACK IN THE PAVEMENT AT THE EDGE OF THE EXISTING CONCRETE PAVEMENT, ALONG THE LENGTH OF THE UNDERDRAIN RUNS. THE CRACK DEPTH SHALL EXTEND THROUGH BOTH THE PROPOSED 5" ASPHALTIC CONCRETE OVERLAY AND THE 3" MINIMUM DEPTH 301 PLUG SHOWN ON THE UNDERDRAIN DETAIL TO THE TOP OF THE UNDERDRAIN BACKFILL.

THE COST OF ALL EQUIPMENT, MATERIALS, AND LABOR NECESSARY TO CONSTRUCT THE CRACK SHALL BE COVERED UNDER THE UNIT PRICE BID FOR:

ITEM SPECIAL LIN. FT. SAWING

ITEM SPECIAL OBSERVATION RISER

OBSERVATION RISERS SHALL BE PLACED ON THE INDICATED SHALLOW UNDERDRAIN RUNS AT THE UPSTREAM END, MIDPOINT, AND JUST PRIOR TO THE END OF THE UNDERDRAIN AT THE EDGE OF PAVEMENT. THE RISERS SHALL BE 6" PIPE, 707.17 NON-PERFORATED, ASTM 3034 SDR35, OR S.S. 931. THE TOP OF THE RISER SHALL BE CONSTRUCTED 1/4" BELOW THE PROPOSED PAVEMENT AND HAVE A THREADED REMOVEABLE CAP. THE RISERS SHALL BE PLACED ON THE UNDERDRAIN RUNS AS PER THE DETAIL BELOW DURING INSTALLATION OF THE UNDERDRAIN.
BACKFILL SHALL BE PER THE 605 ITEM ON WHICH THE RISER IS LOCATED. THE COST OF ALL EQUIPMENT, MATERIALS, AND LABOR REQUIRED FOR INSTALLATION OF THE RISER SHALL BE COVERED UNDER THE UNIT PRICE BID FOR:

ITEM SPECIAL EACH OBSERVATION RISER

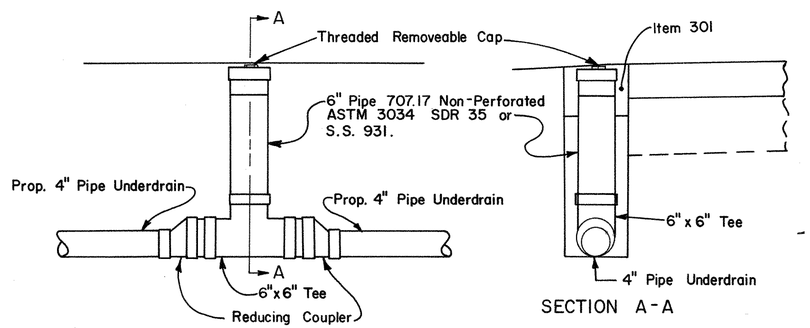

4" PIPE UNDERDRAIN

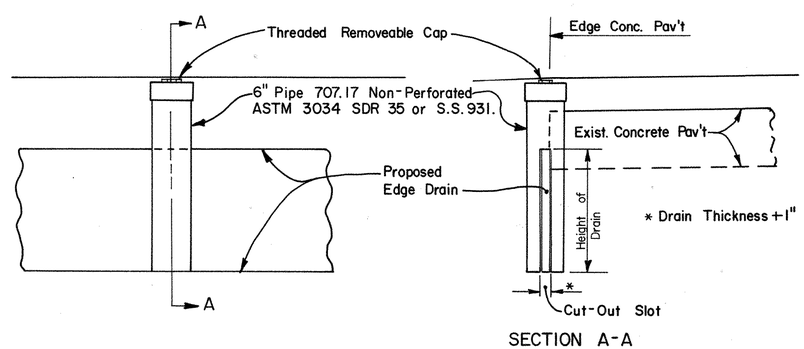

PREFABICATED EDGEDRAIN

ITEM 611 REINFORCED CONCRETE APPROACH SLAB (T=15"), AS PER PLAN

THE APPROACH SLABS SHALL CONFORM TO ITEM 611 WITH THE FOLLOWING ADDITIONS. APPROACH SLABS ARE TO BE CONSTRUCTED APPROXIMATELY ONE-HALF WIDTH AT A TIME WHICH SHALL INCLUDE ADDITIONAL RE-STEEL FOR LAPPING TRANSVERSE BARS. SEE SHEET 112 FOR APPROXIMATE LENGTHS REQUIRED. PREFORMED ELASTOMERIC JOINT SEALER SHALL BE PLACED ACROSS THE APPROACH SLAB IN ONE PIECE. TYPE A WATERPROOFING SHALL BE PLACED ON THE APPROACH SLAB SIDE OF THE BACKWALL PRIOR TO PLACEMENT OF THE APPROACH SLAB CONCRETE. SEE DETAIL B ON ST'D. DRWG. AS-1-81 SHEET 2 OF 3 FOR JOINT SEALER AND WATERPROOFING INSTALLATION. PAYMENT FOR THE ABOVE SHALL INCLUDE ALL TOOLS AND MATERIALS NECESSARY TO COMPLETE THE WORK AND SHALL BE INCLUDED IN THE UNIT PRICE BID PER SQ. YD. FOR ITEM 611 REINFORCED CONCRETE APPROACH SLAB (T=15"), AS PER PLAN.

GENERAL NOTES

FIELD OFFICE

THE CONTRACTOR SHALL PROVIDE A SUITABLE FIELD OFFICE HAVING A MINIMUM OF 800 SQ. FT. OF FLOOR SPACE. PAYMENT SHALL BE AT THE LUMP SUM PRICE BID FOR ITEM 619, FIELD OFFICE.

CONTINGENCY QUANTITIES

THE CONTRACTOR SHALL NOT ORDER MATERIALS OR PERFORM WORK LISTED IN THE GENERAL SUMMARY FOR ITEMS DESIGNATED BY PLAN NOTE TO BE USED "AS DIRECTED BY THE ENGINEER" UNLESS AUTHORIZED BY THE ENGINEER. THE ACTUAL WORK LOCATIONS AND QUANTITIES USED AT THE ENGINEER'S DISCRETION SHALL BE MADE A MATTER OF RECORD BY INCORPORATION INTO THE FINAL CHANGE ORDER GOVERNING COMPLETION OF THIS PROJECT.

PROFILE AND ALIGNMENT

THE PROPOSED PAVEMENT RESURFACING COURSE SHALL FOLLOW THE ALIGNMENT AND PROFILE OF THE EXISTING PAVEMENT. PREVIOUS CONSTRUCTION PLANS SHOWING THE ORIGINAL ALIGNMENT AND PROFILE GRADE ARE ON FILE FOR INSPECTION IF NECESSARY AT THE O.D.O.T DISTRICT 5 OFFICE AS PROJECTS SHOWN ON THIS SHEET.
THE PROPOSED ASPHALT CONCRETE OVERLAYS SHALL HAVE A UNIFORM THICKNESS OF APPROXIMATELY 5 INCHES. EXISTING CROSS-SECTIONS FOR EARTHWORK AVAILABLE AT THE DISTRICT 5 OFFICE.

ITEM 407 TACK COAT

THE RATE OF APPLICATION OF 407 TACK COAT SHALL BE SUBJECT TO ADJUSTMENT, AS DIRECTED BY THE ENGINEER.

PLAN QUANTITIES INDICATE AN AVERAGE APPLICATION RATE OF 0.10 GALLONS PER SQUARE YARD OF TACK COAT FOR ESTIMATING PURPOSES ONLY.

ADDITIONAL TACK COAT

IN ADDITION TO THE REQUIREMENTS OF 407.05, A TACK COAT SHALL BE APPLIED, AS DESCRIBED ABOVE ON ITEM 301 BITUMINOUS AGGREGATE BASE COURSE IMMEDIATELY AHEAD OF THE PAVING OPERATION FOR THE ITEM 446 INTERMEDIATE COURSE.
THE FOLLOWING QUANTITY HAS BEEN INCLUDED IN THE GENERAL SUMMARY TO PERFORM THE WORK AS DESCRIBED ABOVE.

ITEM 407 TACK COAT	17,000	GALLONS (STATE & FEDERAL)
ITEM 407 TACK COAT	3,000	GALLONS (CITY, STATE & FEDERAL)

UTILITY OWNERSHIP

THE FOLLOWING UTILITIES AND OWNERS ARE LOCATED WITHIN THE WORK LIMITS OF THIS PROJECT:

ELECTRIC: OHIO POWER COMPANY
P.O.BOX 400
CANTON, OHIO 44701
PH. 216-456-8173

TELEPHONE: ALLTEL OHIO INC.
66 N.FOURTH STREET
NEWARK, OHIO 43055
PH. 614-349-8551

GAS: COLUMBIA GAS OF OHIO
942 W.GOODALE BLVD.
P.O.BOX 2586
COLUMBUS, OHIO 43212
PH. 614-460-2097

UNDERGROUND UTILITIES

THE LOCATIONS OF UNDERGROUND UTILITIES SHOWN ON THE PLANS ARE AS OBTAINED FROM THE OWNERS OF THE UTILITY AS REQUIRED BY SECTION 153.64 ORC.

CONSTRUCTION PLAN

REFERENCE IS HEREBY MADE TO THE FOLLOWING DESIGNATED PLAN FOR FORMER CONSTRUCTION PROJECTS, PORTIONS OF WHICH COVER AREAS INCLUDED IN THIS PROPOSED IMPROVEMENT.

LIC-16-14.10 LIC-37-15.61
LIC-16-(14.30-18.51) LIC-161-11.13

COPIES OF THESE PLANS ARE ON FILE EITHER AT THE DISTRICT 5 OFFICE OF THE OHIO DEPARTMENT OF TRANSPORTATION OR AT THE OFFICE OF THE ADMINISTRATOR OF CONTRACT SALES COLUMBUS, OHIO.

ITEM 404 BITUMINOUS CONCRETE FOR MAINTAINING TRAFFIC.

A QUANTITY OF ITEM 404 BITUMINOUS CONCRETE, AC-20 HAS BEEN INCLUDED IN THE PLANS TO REPAIR PAVEMENT OR BERMS DAMAGED WHEN MAINTAINING TRAFFIC AS DESCRIBED AS PER ITEM 614 MAINTAINING TRAFFIC.

THE FOLLOWING ESTIMATED QUANTITY HAS BEEN INCLUDED IN THE GENERAL SUMMARY FOR THE ABOVE PURPOSE.

ITEM 404 BITUMINOUS CONCRETE FOR MAINTAINING TRAFFIC	50 CU. YD. (CITY, STATE & FED.)
ITEM 404 BITUMINOUS CONCRETE FOR MAINTAINING TRAFFIC.	300 CU. YD. (STATE & FED.)

NOTE: THIS QUANTITY INCLUDES MATERIAL TO STABILIZE BERMS TO MAINTAIN TRAFFIC AND REPAIR BERMS WHEN MAINTAINING ONE LANE OF TRAFFIC ON S.R. 16 AS SHOWN ON SHEET 11.

UNSUITABLE SUBGRADE

DUE TO POOR SOILS IN THE AREA OF THE UNDERPASSES & OVERPASSES AN ESTIMATED QUANTITY OF ITEM 203 EXCAVATION AND ITEM 203 EMBANKMENT USING GRANULAR MATERIAL AS PER 203.02 HAS BEEN INCLUDED IN THE GENERAL SUMMARY TO BE USED AS DIRECTED BY THE ENGINEER.

THE ESTIMATED QUANTITY SHALL BE 1' UNDERCUT AND REPLACEMENT THROUGH THE AREAS OF THE UNDERPASSES & OVERPASSES.

LATERIAL LIMITS ARE 1' BEYOND OUTSIDE EDGES AT BERM.

ITEM 203 EXCAVATION, NOT INCLUDING EMBANKMENT CONST.	2650 C.Y.
ITEM 203 EMBANKMENT USING GRANULAR MATERIAL	2650 C.Y.

TRAFFIC CONTROL STANDARD CONSTRUCTION DRAWINGS

REFERENCES TO SUPPLEMENTAL SPECIFICATIONS 857, 858, 861, 957, 958 AND 961 ON THE TRAFFIC CONTROL STANDARD CONSTRUCTION DRAWINGS IN THESE PLANS SHALL BE CONSIDERED TO READ AS RESPECTIVE REFERENCES TO ITEMS 630, 631, 633, 730, 731 AND 733, IN THE CONSTRUCTION AND MATERIALS SPECIFICATIONS MANUAL.

ITEM 446 ASPHALT CONCRETE

ON THIS PROJECT, ITEM 446 ASPHALT CONCRETE , TABLE 2-2, PROPERTIES OF MIXTURES FOR HEAVY TRAFFIC VOLUMES SHALL APPLY.

JOINT SEALERS

ALL REFERENCES TO 705.01 OR 705.02, APPEARING ON STANDARD DRAWINGS OR ON THE PLANS, SHALL BE CONSIDERED TO READ 705.11.

ITEM 203 EMBANKMENT, AS PER PLAN

ITEM 203 EMBANKMENT SHALL CONSIST OF PLACING EMBANKMENT AT THE OUTSIDE EDGES OF THE PAVEMENT AS SHOWN ON SHEET 3.
THE EXISTING BERM SHALL BE PREPARED AS REQUIRED IN SPEC. 201.04.
ALL EMBANKMENT SHALL BE PLACED AND COMPACTED IN ACCORDANCE WITH SPEC. 203.09, EXCEPT THAT REQUIREMENTS FOR MOISTURE, DENSITY CONTROL, AND BENCHING ARE HEREBY WAIVED FOR WIDENED SHOULDERS WHICH DO NOT SUPPORT ANY PORTION OF THE NEW PAVEMENT OR SHOULDER.
CARE SHALL BE EXERCISED WHEN PLACING EMBANKMENT AROUND EXISTING DRAINAGE SYSTEMS. EMBANKMENT AROUND EXISTING DRAINAGE SYSTEMS SHALL BE PLACED AT THE DIRECTION OF THE PROJECT ENGINEER.
THE CONTRACTOR WILL PROVIDE STAKES AT 250' INTERVALS AT THE OUTSIDE EDGE OF PAVEMENT AND 500' INTERVALS AT THE MEDIAN EDGE OF PAVEMENT TO INSURE THAT SLOPES ARE CONSTRUCTED TO PLAN.
COST OF THE STAKES TO BE INCLUDED IN THE UNIT PRICE BID FOR ITEM 623 CONSTRUCTION LAYOUT STAKES.

THE FOLLOWING ESTIMATED QUANTITY HAS BEEN CARRIED TO THE GENERAL SUMMARY, AND IS AN ESTIMATED QUANTITY TO PERFORM THE WORK AS SHOWN ON SHEET 3.

	STATE & FEDERAL	
ITEM 203 EMBANKMENT, AS PER PLAN	5,400	CU. YDS.
	CITY, STATE & FEDERAL	
ITEM 203 EMBANKMENT, AS PER PLAN	950	CU. YDS.

ITEM SPECIAL, LAW ENFORCEMENT OFFICER WITH PATROL CAR

IN ADDITION TO THE REQUIREMENTS OF ITEM 614, A UNIFORMED OFF DUTY STATE HIGHWAY PATROLMAN AND OFFICIAL PATROL CAR WITH EMERGENCY FLASHERS OPERATING, SHALL BE PROVIDED DURING ANY INTERMITTENT FIRST DAY SET-UP PERIOD AND LAST DAY TEARDOWN PERIOD. THIS REQUIREMENT DOES NOT PRECLUDE THE CONTRACTORS USE OF STATE HIGHWAY PATROLMAN FOR OTHER PURPOSES IN THE PROJECT AREA. HOWEVER WHERE SUCH USAGE IS AT THE OPTION OF THE CONTRACTOR, PAYMENT FOR THE STATE HIGHWAY PATROLMAN'S SERVICES INVOLVED SHALL BE INCLUDED IN THE LUMP SUM BID FOR ITEM 614 MAINTAINING TRAFFIC.
INFORMATION REGARDING ARRANGEMENTS AND PAYMENTS BY THE CONTRACTORS FOR SPECIAL DUTY PATROL SERVICES MAY BE OBTAINED BY CONTACTING THE OHIO HIGHWAY PATROL, 660 EAST MAIN STREET, COLUMBUS, OHIO, TELEPHONE 466-2660.
THE FOLLOWING ESTIMATED QUANTITIES HAVE BEEN INCLUDED IN THE GENERAL SUMMARY FOR THIS PURPOSE.

ITEM SPECIAL LAW ENFORCEMENT OFFICER WITH PATROL CAR 200 HOURS

ITEM 202 RAISED PAVEMENT MARKERS REMOVED FOR STORAGE

THE RAISED PAVEMENT MARKERS REMOVED ON THIS JOB SHALL BE STORED ON THE JOB SITE, AND REMOVED BY STATE FORCES.

THE FOLLOWING QUANTITY HAS BEEN INCLUDED IN THE GENERAL SUMMARY FOR THE ABOVE PURPOSE.

	STATE & FEDERAL	
ITEM 202 RAISED PAVEMENT MARKERS REMOVED FOR STORAGE	590	EACH

GENERAL NOTES

ITEM 452 PLAIN CONCRETE PAVEMENT, AS PER PLAN

ALL COARSE AGGREGATES LARGER THAN 7, 78, OR 8 SIZE USED IN THE PORTLAND CEMENT CONCRETE PAVEMENT ON THIS PROJECT SHALL BE TESTED IN ACCORDANCE WITH "METHODS OF TESTING COARSE AGGREGATES TO DETERMINE SUSCEPTIBILITY TO D-CRACKING".

THE AREA GENERATED UNDER THE CURVE OBTAINED BY PLOTTING THE EXPANSIONS OF THE TEST SPECIMENS VERSUS THE NUMBER OF TEST CYCLES SHALL NOT EXCEED 2.05 AT 350 OR LESS CYCLES.

PROPORTIONING AND AGGREGATE SIZE:

WHEN THE COARSE AGGREGATE SIZE NO. 57 IS BEING USED, THE PROPORTIONING OF THE CONCRETE MATERIALS SHALL BE IN ACCORDANCE WITH THE 499.03 CONCRETE TABLE OF THE CONSTRUCTION AND MATERIALS SPECIFICATIONS MANUAL.

IF SIZE NO. 7, 78 OR NO. 8 IS USED, THE QUANTITIES WILL BE IN ACCORDANCE WITH THE FOLLOWING TABLE:

QUANTITIES PER CUBIC YARD
CLASS DX (Using No.7, 78, or 8 size)

TYPE OF COURSE AGGREGATE	FINE AGGREGATE (LB.)	COURSE AGGREGATE (LB.)	TOTAL (LB.)	MAXIMUM CEMENT CONTENT (LB.)	WATER/ CEMENT RATIO
GRAVEL	1200	1470	2670	650	0.50
LIMESTONE	1255	1430	2685	650	0.50
SLAG	1280	1220	2500	650	0.50

WHEN NO. 7, NO. 78 OR NO. 8 SIZE IS USED, THE ENTRAINED AIR CONTENT SHALL BE 8 PERCENT ± 2. OTHERWISE, THE ENTRAINED AIR CONTENT SHALL BE 6 PERCENT ± 2.

IN ADDITION TO THE PRECEEDING REQUIREMENTS, THE CONTRACTOR AT HIS DISCRETION MAY SUBSTITUTE ONE OF THE FOLLOWING OPTIONS:

OPTION 1:

THE CEMENT CONTENT MAY BE REDUCED AS MUCH AS 50 LBS. PER CUBIC YARD, WITH THE SUBSTITUTION OF AN EQUIVALENT VOLUME OF AGGREGATE, PROVIDED THE CONTRACTOR USES AN APPROVED WATER REDUCING ADMIXTURE MEETING THE REQUIREMENTS OF 705.12, TYPE A.

OPTION 2:

TYPE OF COURSE AGGREGATE	FINE AGGREGATE (LB.)	COURSE AGGREGATE (LB.)	TOTAL (LB.)	FLY ASH (LB.)	CEMENT CONTENT (LB.)	MAXIMUM WATER CEMENT + FA RATIO
GRAVEL	1190	1450	2640	100	550	0.50
LIMESTONE	1250	1400	2650	100	550	0.50
SLAG	1225	1240	2465	100	550	0.50

THE WATER CEMENT/RATIO SHALL BE BASED ON THE COMBINED WEIGHT OF CEMENT AND FLY ASH.

FLY ASH SHALL MEET THE REQUIREMENTS OF A.S.T.M. C618, CLASS C or F, EXCEPT THE LOSS ON IGNITION SHALL NOT EXCEED 3 PERCENT.

FINE AGGREGATE FOR 452 SHALL CONTAIN NOT LESS THAN 25 PERCENT OF SILICEOUS PARTICLES DETERMINED BY THE INSOLUBLE RESIDUE TEST ON FILE AT THE LABORATORY.

IN ADDITION TO THE SPECIFICATION REQUIREMENTS FOR THE ABOVE REFERENCED ITEMS, AN APPROVED WATER REDUCING SET RETARDER MEETING THE REQUIREMENTS OF 705.12, TYPE D SHALL BE REQUIRED WHEN THE CONCRETE TEMPERATURE EXCEEDS A NOMINAL TEMPERATURE OF 75° F.

MIXES CONTAINING FLY ASH MAY ONLY BE USED BETWEEN APRIL 1 AND OCTOBER 15 UNLESS OTHERWISE AUTHORIZED BY THE DIRECTOR.

ALL OTHER PROVISIONS OF 452 AND 499.03 (SP. GR. OF FLY ASH = 2.30) SHALL REMAIN IN EFFECT.

IN LIEU OF THE REQUIREMENTS OF 451.08 (d) AND STANDARD DRAWING BP-4. WIDTH OF CONTRACTION JOINTS SHALL BE 1/2" ± 1/16" AND THE DEPTH OF THE JOINT SHALL BE A MINIMUM OF 2¼".

THE PREFORMED ELASTIC JOINT SEALER SHALL MEET 705.11 AND HAVE A MINIMUM WIDTH OF 1 1/4". DRAWINGS AND SPECIFICATIONS OF THE MATERIAL PROPOSED FOR USE SHALL BE SUBMITTED TO THE DIRECTOR FOR REVIEW AND APPROVAL.

IN LIEU OF 452.01 OF THE SPECIFICATIONS, CONTRACTION JOINTS SHALL BE CONSTRUCTED WITH DOWELS AS SHOWN FOR ITEM 451 PAVEMENT ON STANDARD DRAWING BP-4 DATED 1-11-85. DOWELS SHALL BE COATED IN ACCORDANCE WITH 709.13. DOWEL ASSEMBLIES SHALL BE EPOXY COATED AS PER SUPP. SPEC. 941. DOWEL INSTALLING MACHINES WILL NOT BE PERMITTED ON THIS PROJECT.

THE COST OF ALL OF THE ABOVE SHALL BE INCLUDED IN THE UNIT PRICE BID FOR: ITEM 452 PLAIN CONCRETE PAVEMENT, AS PER PLAN.

ITEM 622 TEMPORARY CONCRETE BARRIER

THE CONTRACTOR SHALL INSTALL A TEMPORARY CONCRETE BARRIER, AS PER STANDARD DRAWING MC-9A, AS SHOWN ON SHEET 12.

AFTER THE PROJECT HAS BEEN COMPLETED THE TEMPORARY CONCRETE BARRIER SHALL BECOME THE PROPERTY OF THE CONTRACTOR AND REMOVED BY HIM.
THE FOLLOWING ESTIMATED QUANTITY HAS BEEN INCLUDED IN THE GENERAL SUMMARY FOR THE ABOVE PURPOSE.
(SEE SHEET 97 FOR ITEM 622 TEMPORARY CONCRETE BARRIER, BRIDGE MOUNTED)

E.B. CLOSING DRIVING LANE		E.B. CLOSING PASSING LANE
BRIDGE NO. LIC-16-1560	850 L.F.	850 L.F.
BRIDGE NO. LIC-16-1594	850 L.F.	850 L.F.
FULL DEPTH REPLACEMENT AT CHERRY VALLEY RD.	2235 L.F.	2235 L.F.

W.B. CLOSING DRIVING LANE		W.B. CLOSING PASSING LANE
UNDERPASS S.R.16	1340 L.F.	1340 L.F.
UNDERPASS S.R.37	1040 L.F.	1340 L.F.
BRIDGE NO. LIC-16-1560	850 L.F.	850 L.F.
BRIDGE NO. LIC-16-1594	850 L.F.	850 L.F.
FULL DEPTH REPLACEMENT AT CHERRY VALLEY RD.	2235 L.F.	2235 L.F.
BRIDGE NO. LIC-16-1773	*850 L.F.	*850 L.F.

* ITEM 622 TEMPORARY CONCRETE BARRIER 1,700 L.F. (CITY, STATE & FEDERAL)
ITEM 622 TEMPORARY CONCRETE BARRIER 20,800 L.F. (STATE & FEDERAL)

LOCATION OF GUARDRAIL

STATIONS AS SHOWN ON THESE PLANS WERE TAKEN FROM PREVIOUS CONSTRUCTION PLANS, AND ARE ASSUMED TO BE CORRECT. THE STATIONS, AS SHOWN IN THESE PLANS, ARE SUBJECT TO ADJUSTMENT PRIOR TO FINAL ACCEPTANCE.
THE ENGINEER SHALL BE SATISIFIED THAT ALL INSTALLATIONS WILL AFFORD MAXIMUM PROTECTION FOR TRAFFIC.

ITEM 606 GUARDRAIL POSTS INSTALLED

THIS ITEM SHALL INCLUDE PROVIDING AND INSTALLING ADDITIONAL POSTS AS PER GR-6A. THE ADDITIONAL POSTS SHALL BE SPACED AT 3'-2 1/2" BETWEEN THE 6'-3" SPACING AS SHOWN ON GR-6A. THE INSTALLED GUARDRAIL POSTS SHALL INCLUDE SPACER BLOCKS, BACK-UP PLATES, ALL NECESSARY HARDWARE, LABOR AND EQUIPMENT TO COMPLETE THIS ITEM.

BASIS FOR PAYMENT – PAYMENT WILL BE MADE AT THE CONTRACT UNIT PRICE BID FOR:

ITEM	UNIT	DESCRIPTION
606	EACH	GUARDRAIL POSTS INSTALLED

GUARDRAIL OVER CULVERTS

WHEN SUFFICIENT POST DEPTH IS NOT AVAILABLE TO A CULVERT, THE GUARDRAIL POSTS DIRECTLY OVER THE CULVERT SHALL NOT BE DRIVEN, BUT SET IN HOLES.
IF THE DISTANCE BETWEEN THE GROUND AND THE TOP OF THE CULVERTS IS LESS THAN 3 FT., THE POST SHALL BE ENCASED IN A MINIMUM OF 4" THICKNESS OF CLASS C CONCRETE FOR THE FULL DEPTH OF THE POST. PAVEMENT FOR THE ABOVE SHALL BE INCLUDED IN THE UNIT PRICE FOR THE PERTINENT 606 ITEMS.

ITEM 659 SEEDING AND MULCHING

THE FOLLOWING QUANTITY WAS USED TO ESTIMATE THE AREAS FOR SEEDING AND MULCHING. THE FINAL AREA SHALL BE DETERMINED BY THE PROJECT ENGINEER.

26,300 SQ.YD. CITY, STATE & FEDERAL 150,300 SQ.YD. STATE & FEDERAL

THE FOLLOWING QUANTITIES HAVE BEEN CARRIED TO THE GENERAL SUMMARY.

	CITY, STATE & FEDERAL		STATE & FEDERAL	
ITEM 659 SEEDIND AND MULCHING	26,300	SQ.YD.	150,300	SQ.YD.
ITEM 659 COMMERICAL FERTILIZER	2.37	TON	14.84	TON
ITEM 659 AGRICULTURAL LIMING	11.84	TON	74.18	TON

CALCULATED FROM TOTAL SEEDING AND MULCHING ON GENERAL SUMMARY.

TEMPORARY SOIL EROSION AND SEDIMENT CONTROL

THE FOLLOWING ESTIMATED QUANTITIES ARE TO BE USED AS DIRECTED BY THE ENGINEER, FOR TEMPORARY EROSION AND SEDIMENT CONTROL MEASURES:

		CITY, STATE & FEDERAL		STATE & FEDERAL	
207	TEMPORARY SEEDING AND MULCHING	5,300	SQ.YD.	33,000	SQ.YD.
207	STRAW OR HAY BALES	50	EACH	250	EACH
659	WATER	12	M.GAL.	72	M.GAL.
659	COMMERCIAL FERTILIZER	1.13	TON	7.05	TON

ITEM 617 WATER

THE FOLLOWING ESTIMATED QUANTITY HAS BEEN INCLUDED IN THE GENERAL SUMMARY TO PERFORM THE WORK AS DESCRIBED IN SECTION 617.05 OF THE SPECIFICATIONS.

ITEM 617 WATER 9 M.GAL. (CITY, STATE & FEDERAL)
ITEM 617 WATER 43 M.GAL. (STATE & FEDERAL)

REMOVAL OF TREES OR STUMPS

ALTHOUGH THERE ARE NO TREES AND/OR STUMPS SPECIFICALLY MARKED FOR REMOVAL WITHIN THE LIMITS OF THIS PROJECT, A LUMP SUM QUANTITY HAS BEEN INCLUDED IN THE GENERAL SUMMARY FOR ITEM 201, CLEARING AND GRUBBING AS PER PLAN. ALL PROVISIONS AS SET FORTH IN THE SPECIFICATIONS UNDER THIS ITEM SHALL BE INCLUDED IN THE LUMP SUM PRICE BID FOR ITEM 201, CLEARING AND GRUBBING AS PER PLAN.

ITEM 201 CLEARING AND GRUBBING, AS PER PLAN

IN ADDITION TO THE REQUIREMENTS OF ITEM 201, THE FOLLOWING REQUIREMENTS SHALL APPLY. THE EXISTING SLOPE AREAS WHERE EMBANKMENT IS TO BE MADE SHALL REQUIRE DISKING, OR A METHOD APPROVED BY THE ENGINEER, PRIOR TO PLACEMENT OF EMBANKMENT.

THE FOLLOWING ESTIMATED QUANTITY HAS BEEN INCLUDED IN THE GENERAL SUMMARY FOR THIS PURPOSE.

ITEM 201 CLEARING AND GRUBBING, AS PER PLAN	LUMP	CITY, STATE & FEDERAL
ITEM 201 CLEARING AND GRUBBING, AS PER PLAN	LUMP	STATE & FEDERAL

WATERING AND MOWING PERMANENT SEEDED AREAS

THE FOLLOWING ESTIMATED QUANTITIES ARE TO BE USED AS DIRECTED BY THE ENGINEER TO PROMOTE GROWTH AND TO CARE FOR THE PERMANENT SEEDED AREAS, AS PER 659.09:

		CITY, STATE & FEDERAL		STATE & FEDERAL	
659	WATER	29	M GAL.	163	M GAL.
659	MOWING	60	M SQ. FT.	371	M SQ. FT.

L016104A

GENERAL NOTES

ITEM 802 BARRIER REFLECTORS

THE FOLLOWIMG ESTIMATED QUANTITIES HAVE BEEN CARRIED TO THE GENERAL SUMMARY TO PERFORM THE WORK AS DESCRIBED IN SUPPLEMENTAL SPECIFICATION 802.

LOCATIONS	STATE & FEDERAL	CITY, STATE & FEDERAL
ITEM 622 CONCRETE BARRIER	3 EACH (W)	
ITEM 606 GUARDRAIL	321 EACH (W) 33 EACH (Y)	84 EACH (W) 17 EACH (Y)
BRIDGE PARAPETS	12 EACH (W) 8 EACH (Y)	2 EACH (W) 2 EACH (Y)

	STATE & FEDERAL	CITY, STATE & FEDERAL
ITEM 802 BARRIER REFLECTORS, TYPE A	354 EACH	101 EACH
ITEM 802 BARRIER REFLECTORS, TYPE B	23 EACH	4 EACH

ITEM 408 BITUMINOUS PRIME COAT, AS PER PLAN

PRIOR TO PLACING THE 4' WIDTH OF ITEM 404 MATERIAL A SOIL STERILIZER USING ONE OF THE FOLLOWING BRANDS, SHALL BE APPLIED AT THE RATE RECOMMENDED BY THE MANUFACTURE.

1. PRAMITEL 25 E BY CIBA-GEIGY
2. KROVER BY DIAMOND SHAMROCK OR AN APPROVED EQUAL.

AFTER THE STERILIZER HAS BEEN PLACED THE 408 BITUMINOUS PRIME COAT SHALL BE APPLIED AT THE RATE OF 0.4 GAL. PER SQ.YD. PRIOR TO PLACING THE 404 ASPHALT CONCRETE.

PAYMENT FOR ALL THE ABOVE SHALL BE PAID FOR AT THE UNIT PRICE BID FOR ITEM 408 BITUMINOUS PRIME COAT, AS PER PLAN.

ITEM 606 GUARDRAIL TYPE 5, AS PER PLAN

THIS WORK SHALL CONSIST OF CONSTRUCTING THE TYPE 5 GUARDRAIL AS PER STANDARD CONSTRUCTION DRAWING GR-2B AND SHALL INCLUDE BORING THRU THE 404 BERM TREATMENT TO A DEPTH OF 6" AT EACH POST LOCATION AS SHOWN ON SHEETS 15-17. AFTER THE POST HAS BEEN PLACED THE CONTRACTOR SHALL CONSTRUCT A MOUND AROUND THE BASE OF THE POST. THE MOUND SHALL BE AS SHOWN ON THIS SHEET AND HAND TAMPED FOR COMPACTION.
ALL THE WORK AS DESCRIBED ABOVE SHALL BE INCLUDED IN THE UNIT PRICE BID FOR ITEM 606 GUARDRAIL TYPE 5, AS PER PLAN.
ANY DAMAGE TO THE ASPHALT CAUSED BY THE INSTALLATION OF THE GUARDRAIL OR OTHER ITEMS OF WORK SHALL BE REPAIRED, AT NO ADDITIONAL COST TO THE STATE.

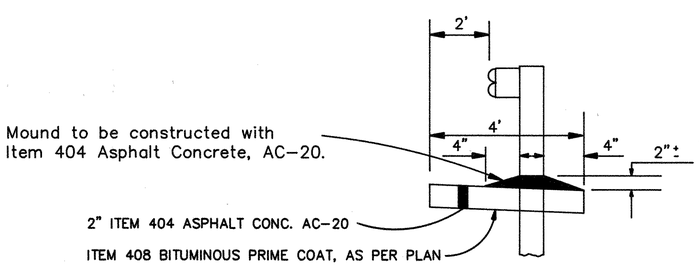

CONNECTION TO EXISTING PIPE

WHERE THE PLANS PROVIDE FOR PROPOSED CONDUIT TO BE CONNECTED TO, OR TO CROSS EITHER OVER OR UNDER AN EXISTING SEWER, IT SHALL BE THE RESPONSIBILITY OF THE CONTRACTOR TO LOCATE THE EXISTING PIPE BOTH AS TO LINE AND GRADE BEFORE HE STARTS TO LAY THE PROPOSED CONDUIT.

PAYMENT FOR ALL OPERATIONS DESCRIBED ABOVE SHALL BE INCLUDED IN THE UNIT PRICE BID FOR THE PERTINENT 603 CONDUIT ITEMS.

ITEM 625 PULL BOX 713.09, 18"

BESIDES THE REQUIREMENTS OF 625 AND 713.09 THIS ITEM SHALL INCLUDE CUTTING THE EXISTING 1 1/2" CONDUIT, CONNECTING THE EXISTING AND PROPOSED LEAD-IN CABLE AND ALL ITEMS AND WORK NEEDED TO INSTALL THE PULL BOX IN LINE WITH THE EXISTING CONDUIT.
ALL WORK AS DESCRIBED ABOVE SHALL BE INCIDENTAL TO ITEM 625 PULL BOX 713.09.

ITEM 202 CONDUIT REMOVED

THIS ITEM SHALL INCLUDE REMOVING THE 3" CONDUIT SPECIFIED IN THE PLANS. IT SHALL BECOME THE PROPERTY OF THE CONTRACTOR AND REMOVED FROM THE JOB SITE BY HIM.

PAYMENT SHALL BE PER LINEAR FOOT OF ITEM 202 CONDUIT REMOVED.

ROUNDING OF CORNERS SHOWN ON CROSS SECTIONS

THE ROUNDED CORNERS SHOWN ON THE TYPICAL SECTIONS, APPLY TO ALL CROSS SECTIONS EVEN THOUGH OTHERWISE SHOWN ON THESE PLANS.

ITEM 606 BRIDGE TERMINAL ASSEMBLY, TYPE F, AS PER PLAN

THIS ITEM SHALL BE FOR INSTALLING A TYPE F BRIDGE TERMINAL ASSEMBLY AS SHOWN ON STANDARD DRAWING GR-3A. EXISTING TERMINAL CONNECTOR, W6x9 POST AND STEEL BOX AS SHOWN ON STANDARD DRAWING GR-3A MAY BE REUSED AS DIRECTED BY THE PROJECT ENGINEER.

ITEM 616 DUST CONTROL

THE FOLLOWING ESTIMATED QUANTITIES HAVE BEEN CARRIED TO THE GENERAL SUMMARY TO PERFORM THE WORK AS DESCRIBED IN ITEM 616 DUST CONTROL.

STATE & FEDERAL	
ITEM 616 WATER	100 M.GAL.
ITEM 616 CALCIUM CHLORIDE	20 TON

CITY, STATE & FEDERAL	
ITEM 616 WATER	20 M.GAL.
ITEM 616 CALCIUM CHLORIDE	5 TON

ITEM 202 PORTIONS OF APPROACH SLABS REMOVED

THIS ITEM SHALL CONSIST OF REMOVING PORTIONS OF THE CONCRETE APPROACH SLABS AND THE RE-STEEL AS DETAILED IN THE PLANS. PAYMENT FOR THE ABOVE WORK SHALL BE INCLUDED IN THE UNIT PRICE BID PER SQ.YD. FOR ITEM 202 PORTIONS OF APPROACH SLABS REMOVED, WHICH SHALL INCLUDE ALL LABOR, TOOLS AND INCIDENTALS NECESSARY TO COMPLETE THE WORK.

REPLACEMENT DRUMS

DRUMS FURNISHED BY THE CONCTRACTOR IN ACCORDANCE WITH THE REQUIREMENTS OF THE PLANS, SPECIFICATIONS AND PROPOSAL WHICH BECOME DAMAGED BY TRAFFIC FOR REASONS BEYOND THE CONTROL OF THE CONTRACTOR SHALL BE REPLACED IN KIND WHEN ORDERED BY THE ENGINEER, AND SHALL BE PAID FOR UNDER ITEM SPECIAL REPLACEMENT DRUMS.
PAYMENT FOR EACH DRUM SHALL INCLUDE: (1) THE COST OF REMOVING AND DISPOSING OF THE DAMAGED DRUM AND (2) PROVIDING; MAINTAINING AND REMOVING THE REPLACEMENT DRUMS IN ACCORDANCE WITH THE CONTRACT REQUIREMENTS OF THE ORIGINAL DRUMS.

THE FOLLOWING ESTIMATED QUANTITIES HAVE BEEN CARRIED TO THE GENERAL SUMMARY TO PERFORM THE WORK AS DESCRIBED ABOVE.

	STATE & FEDERAL	CITY, STATE & FEDERAL
ITEM SPECIAL REPLACEMENT DRUMS	100	10

EXISTING PIPE UNDERDRAIN CONNECTIONS

LOCATIONS WHERE THE PROPOSED 6" PIPE UNDERDRAIN CUTS THRU THE EXISTING 6" PIPE UNDERDRAIN, THE EXISTING UNDERDRAIN SHALL BE RECONNECTED INTO THE PROPOSED 6" PIPE UNDERDRAIN. THE EXACT LOCATION AND ELEVATIONS SHALL BE DETERMINED DURING CONSTRUCTION AND SHALL BE CONNECTED AS DIRECTED BY THE PROJECT ENGINEER. NECESSARY PIPE BENDS AND BRANCHES NEEDED TO CONNECT THE EXISTING AND PROPOSED UNDERDRAINS SHALL BE INCLUDED WITH THE COST OF THE 6" CONDUIT TYPE F, 707.15

THE FOLLOWING ESTIMATED QUANTITY HAS BEEN CARRIED TO THE GENERAL SUMMARY TO PERFORM THE WORK AS DESCRIBED ABOVE.

	STATE & FEDERAL	CITY, STATE & FED.
ITEM 603 6" CONDUIT TYPE F, 707.15	50 LIN.FT.	10 LIN.FT.

605 6" PIPE UNDERDRAIN AS PER PLAN

THE REQUIREMENTS OF ITEM 605 SHALL GOVERN THE INSTALLATION OF THE PIPE UNDERDRAIN EXCEPT AS HEREINAFTER MODIFIED: THE BACKFILL MATERIAL SHALL BE MADE OF DURABLE NATURAL AGGREGATE, No. 8 SIZE AND SHALL BE PLACED AROUND THE PIPE FOR THE FULL WIDTH OF THE TRENCH AND SHALL EXTEND TO THE BOTTOM OF THE PAVEMENT OR SUBBASE.

SEEDING

QUANTITIES FOR SEEDING ARE CALCULATED FOR THE SOIL AREAS FIVE (5) FEET OUTSIDE THE WORK LIMITS, AS SHOWN ON SHEET 5.

L0161048

GENERAL NOTES

ITEM 614 MAINTAINING TRAFFIC:

TRAFFIC SHALL BE MAINTAINED AS PER THE DETAIL SHEETS AND SPECIFICATIONS AND AS OUTLINED IN THE CONSTRUCTION AND MAINTENANCE OPERATIONS SECTIONS OF THE OHIO MANUAL OF UNIFORM TRAFFIC CONTROL DEVICES FOR STREETS AND HIGHWAYS, LATEST REVISION. IN ADDITION, THE FOLLOWING REQUIREMENTS SHALL APPLY:

THE CONTRACTOR SHALL SUBMIT, IN WRITING A SCHEDULE OF OPERATIONS TO THE DISTRICT DEPUTY DIRECTOR AND RECEIVE APPROVAL BEFORE WORK IS STARTED ON THE PROJECT.

THE CONTRACTOR SHALL ARRANGE HIS OPERATIONS SO THAT NO WORK WHICH COULD DISRUPT THE NORMAL FLOW OF TRAFFIC SHALL BE PERFORMED ON THE PROJECT FROM NOVEMBER 15 TO APRIL 15. DURING THIS TIME TRAFFIC SHALL BE RETURNED TO BOTH EASTBOUND AND WESTBOUND LANES AND ALL TEMPORARY TRAFFIC CONTROL SHALL BE REMOVED. PERMANENT MARKINGS SHALL BE PUT IN PLACE. A QUANTITY HAS BEEN INCLUDED ON SHEET 70 FOR PLACING PERMANENT PAVEMENT MARKINGS.

THE WORK LIMITS SHOWN ON THESE PLANS ARE FOR THE PHYSICAL CONSTRUCTION ONLY. THE INSTALLATION AND OPERATION OF ALL REQUIRED TRAFFIC CONTROL DEVICES SHALL BE PROVIDED BY THE CONTRACTOR WHETHER INSIDE OR OUTSIDE THESE WORK LIMITS.

RAMP CLOSURES

EACH AND EVERY RAMP CLOSURE DETOUR SHALL BE AS SHOWN ON SHEETS 11 TO 11-B ALL TRAFFIC CONTROL DEVICES, AS SHOWN SHALL BE THE RESPONSIBILITY OF THE CONTRACTOR. AFTER WORK ON THE RAMPS HAS BEEN COMPLETED AND TRAFFIC RETURNED TO ITS ORIGINAL PATTERN THE CONTRACTOR SHALL REMOVE ALL TEMPORARY TRAFFIC CONTROL DEVICES. THE CONTRACTOR SHALL ARRANGE THE RAMP CLOSURES SO THAT NO ONE RAMP CLOSURE SHALL INTERFERE WITH ANOTHER RAMP CLOSURE. DURING THE TIME OF THE RAMP CLOSURE THE CONTRACTOR SHALL COMPLETE ALL WORK AS DESCRIBED IN THE PLANS. UNTIL THE DETOURS ARE PLACED INTO EFFECT, TRAFFIC SHALL BE MAINTAINED AT ALL TIMES. THE CONTRACTOR SHALL GIVE WRITTEN NOTICE TO THE DISTRICT TRAFFIC ENGINEER P.O.BOX 306 JACKSONTOWN, OHIO 43030 (TELE. 614-323-4400) AT LEAST 14 CALENDAR DAYS PRIOR TO THE CLOSING OF A RAMP.

PROSECUTION OF WORK ON RAMPS

EACH AND EVERY RAMP CLOSURE WITH THE EXCEPTION OF RAMP B SHALL BE LIMITED TO TWELVE (12) CONSECUTIVE DAYS. RAMP B'S CLOSURE WHICH SHALL BE IN CONJUNCTION WITH THE CLOSURE FOR BRIDGE STRUCTURE LIC-16-1416L SHALL BE LIMITED TO THIRTY (30) CONSECUTIVE DAYS. SHOULD THE CONTRACTOR FAIL TO COMPLETE THE REQUIRED WORK RELATIVE TO EACH RAMP AND OR STRUCTURE WITHIN THE ALLOTED TIME HE SHALL BE SUBJECT TO LIQUIDATED DAMAGES IN THE AMOUNT OF 1,000.00 PER DAY FOR EACH CALENDAR DAY THAT THE RAMP OR STRUCTURE REMAINS CLOSED AS A RESULT OF UNFINISHED WORK. IT IS OF PARAMOUNT IMPORTANCE THAT THE CONTRACTOR EXPEDITE HIS WORK TO MEET THESE DATES USING WHATEVER MEASURES ARE NECESSARY, INCLUDING BUT NOT LIMITED TO: PERFORMING WORK BY MULTIPLE CREWS, MULTIPLE SHIFTS, OVERTIME AND PREMIUMS FOR OVERTIME, ETC. THERE SHALL NOT BE ANY EXTENSIONS DUE TO WEATHER OR MATERIAL DELAYS WHATSOEVER.

NO RAMP OR STRUCTURE CLOSURE ON THE PROJECT SHALL OCCUR DURING THE FOLLOWING HOLIDAY PERIODS: MEMORIAL DAY, JULY 4th AND LABOR DAY.

CLOSURE - CHERRY VALLEY ROAD:

UNTIL THE CLOSURE IS PLACED INTO EFFECT, TRAFFIC SHALL BE MAINTAINED AT ALL TIMES. IMMEDIATELY AFTER THE INTERSECTION HAS BEEN COMPLETED TRAFFIC SHALL BE RETURNED TO CHERRY VALLEY ROAD. THE CONTRACTOR SHALL GIVE WRITTEN NOTICE TO THE CITY OF NEWARK'S SAFETY DIRECTOR 40 W.MAIN STREET NEWARK, OHIO 43055 (TELE.614-349-6658) AND SERVICE DIRECTOR OR VILLAGE MANAGER, 118 S.MAIN STREET GRANVILLE, OHIO 43023 (TELE.614-587-1880 OR 587-0707), AT LEAST 14 CALENDAR DAYS PRIOR TO CLOSING CHERRY VALLEY ROAD.

ANY CONFLICTING SIGNS WHETHER INSIDE OR OUTSIDE THE WORK LIMITS SHALL BE COVERED OR REMOVED AND TEMPORARY SIGNS ERECTED WHEN APPLICABLE. THE ENGINEER SHALL RECORD COVERED OR REMOVED AND UNCOVERED OR REERECTED SIGNS IN THE PROJECT DIARY. EXISTING SIGNS ON MAINLINE THAT ARE NOT APPLICABLE SHALL BE COVERED OR REMOVED BY THE CONTRACTOR.

BEFORE WORK BEGINS, THE CONTRACTOR SHALL SUBMIT TO THE ENGINEER THE NAMES AND TELEPHONE NUMBERS OF A PERSON OR PERSONS WHO CAN BE CONTACTED 24 HOURS A DAY BY THE OHIO DEPARTMENT OF TRANSPORTATION AND ALL INTERESTED POLICE AGENCIES. THIS PERSON OR PERSONS SHALL BE RESPONSIBLE FOR REPLACING NECESSARY TRAFFIC CONTROL DEVICES IMMEDIATELY.

THE STANDARD DEVICE FOR CLOSING ANY LANES TO TRAFFIC SHALL BE WEIGHTED AND PROPERLY REFLECTORIZED PLASTIC DRUMS.

THE CONTRACTOR SHALL ARRANGE HIS OPERATIONS SO AS TO PREVENT ANY INTERFERENCE TO THE CONTINOUS FLOW OF TRAFFIC. ALL VEHICLES, EQUIPMENT, WORKERS AND THEIR ACTIVITIES ARE RESTRICTED AT ALL TIMES TO ONE SIDE OF THE PAVEMENT UNLESS OTHERWISE APPROVED BY THE ENGINEER.

FOR SAFETY PURPOSES NO EQUIPMENT OR MATERIAL SHALL BE PARKED OR STORED WITHIN THIRTY (30) FEET FROM THE EDGE OF THE PAVEMENT OF THE TRAVELING LANES.

ALL WORK SHALL BE COMPLETED ON THE CLOSED LANE, AS DESCRIBED IN THE SEQUENCE OF OPERATIONS, BEFORE IT IS OPENED TO TRAFFIC UNLESS OTHERWISE DIRECTED BY THE ENGINEER.

A MINIMUM OF ONE LANE OF TRAFFIC IN EACH DIRECTION SHALL BE MAINTAINED AT ALL TIMES. THE LENGTH AND DURATION OF RESTRICTED TRAFFIC ZONES SHALL BE KEPT TO A MINIMUM CONSISTENT WITH THE SPECIFICATION REQUIREMENTS FOR PROTECTION OF COMPLETED COURSES AND AS OUTLINED IN THE SEQUENCE OF OPERATIONS.

TEMPORARY FEATHERS, USING ITEM 404 WILL BE REQUIRED AT INTERSECTIONS, BRIDGES, RAMPS, ENDS OF RUNS OR AT OTHER POINTS DESIGNATED BY THE ENGINEER. THEY SHALL BE INSTALLED ACCORDING TO BP-5 AND REMOVED WHEN NO LONGER REQUIRED. THE COST OF THESE SHALL BE INCLUDED IN ITEM 404 BITUMINOUS CONCRETE FOR MAINTAINING TRAFFIC, SEE SHEET 6.

TRAFFIC SHALL NOT BE EXPOSED TO PAVEMENT DROP OFFS.

PAYMENT FOR ALL OF THE ABOVE, EXCEPT AS NOTED SHALL BE INCLUDED IN THE LUMP SUM BID FOR ITEM 614 MAINTAINING TRAFFIC.

SEQUENCE OF OPERATIONS:
PHASE 1 BEGIN PROJECT TO END PROJECT

(1) INSTALL NECASSARY TRAFFIC CONTROL DEVICES, CLOSE DRIVING LANE AND MAINTAIN TRAFFIC IN THE PASSING LANE. (SEE SHEETS 10, 12 & 116 TO 123).

(2) PLANE DRIVING LANE AS DETAILED. WORK IN THE DRIVING LANE SHALL BE SUSPENDED, AT THE DIRECTION OF THE PROJECT ENGINEER, IN ORDER TO MAINTAIN TRAFFIC TO RAMPS, T.R.131 AND CHERRY VALLEY ROAD. AFTER COMPLETION OF STEP 5 AND THE TEMPORARY FEATHERS CONSTRUCTED, THE CONTRACTOR SHALL ADJUST TRAFFIC AND COMPLETE ALL WORK ON THE DRIVING LANE.

(3) INSTALL NEW ITEM 605 SHALLOW PIPE UNDERDRAINS, AS PER PLAN, AS CALLED FOR IN THE PLAN. HOWEVER, NEW ITEM 605 UNCLASSIFIED PIPE UNDERDRAINS IN OVERPASS AND UNDERPASS AREAS SHALL BE INSTALLED DURING THE CONSTRUCTION OF THE NEW ASPHALT BASE.

(4) CRACK AND SEAT EXISTING CONCRETE PAVEMENT, AS REQUIRED.

(5) IMMEDIATELY CONSTRUCT ITEM 301 COURSES FOR DRIVING LANES AND OUTSIDE BERM AND CONSTRUCT PARTIAL SHOULDER EMBANKMENT. COMPLETE ALL OTHER RELATED WORK AS PER TYPICAL SECTION AND AS DESCRIBED ON SHEETS 30 TO 50 & 116 TO 123.

(6) REMOVE TRAFFIC CONTROL DEVICES FOR CLOSING DRIVING LANE.

PHASE 2: BEGIN PROJECT TO END PROJECT

(1) INSTALL NECESSASRY TRAFFIC CONTROL DEVICES, CLOSE PASSING LANE, AND MAINTAIN TRAFFIC IN THE DRIVING LANE. (SEE SHEETS 10, 12 & 116 TO 123).

(2) PLANE PASSING LANE AS DETAILED.

(3) INSTALL NEW ITEM 605 SHALLOW PIPE UNDERDRAINS, AS PER PLAN, AS CALLED FOR IN THE PLAN. HOWEVER, NEW ITEM 605 UNCLASSIFIED PIPE UNDERDRAINS IN OVERPASS AND UNDERPASS AREAS SHALL BE INSTALLED DURING THE CONSTRUCTION OF THE NEW ASPHALT BASE.

(4) CRACK AND SEAT EXISTING CONCRETE PAVEMENT, AS REQUIRED.

(5) IMMEDIATELY CONSTRUCT ITEM 301 COURSES FOR PASSING LANES AND OUTSIDE BERM AND CONSTRUCT PARTIAL SHOULDER EMBANKMENT. COMPLETE ALL OTHER RELATED WORK AS PER TYPICAL SECTION AND AS DESCRIBED ON SHEETS 30 TO 50 & 116 TO 123.

(6) REMOVE TRAFFIC CONTROL DEVICES FOR CLOSING PASSING LANE.

PHASE 3: BEGIN PROJECT TO END PROJECT

INSTALL NECESSARY TRAFFIC CONTROL DEVICES AND CONSTRUCT ITEM 446 COURSES

NOTE:

STRUCTURE NO. LIC-16-1416L:

AFTER NECESSARY TRAFFIC CONTROL DEVICES HAVE BEEN INSTALLED, WORK ON STRUCTURE NO. LIC-16-1416L MAY BE PERFORMED AT THE OPTION OF THE CONTRACTOR. FOR CLOSURE DETAILS SEE SHEET 12.

RAMPS:

WORK ON THE RAMPS MAY BE CONSTRUCTED AT THE OPTION OF THE CONTRACTOR TO MINIMIZE THE INTERFERENCE WITH THE NORMAL FLOW OF TRAFFIC ON THE RAMPS.

GENERAL:

IT IS THE INTENT OF THIS SEQUENCE OF OPERATIONS TO PROVIDE A WORK AREA FOR THE CONTRACTOR WHILE ALSO MAINTAINING TRAFFIC IN A MANNER WHICH IS SAFE FOR THE TRAVELING PUBLIC.

AT NO TIME SHALL ITEM 617 COMPACTED AGGREGATE BE CONSTRUCTED ABOVE THE EXISTING ASPHALT SURFACE WHEN MAINTAINING TRAFFIC.

ALTERNATE METHODS:

IF THE CONTRACTOR SO ELECTS, HE MAY SUBMIT ALTERNATE METHODS FOR THE MAINTENANCE OF TRAFFIC, PROVIDED THE INTENT OF THE ABOVE PROVISIONS ARE FOLLOWED AND NO ADDITIONAL INCONVIENCE TO THE TRAVELING PUBLIC RESULTS THEREFROM. NO ALTERNATE PLAN SHALL BE PLACED INTO EFFECT UNTIL APPROVAL HAS BEEN GRANTED, IN WRITING, BY THE DIRECTOR.

ALL TEMPORARY AND PERMANENT PAVEMENT MARKINGS SHALL BE IN PLACE BEFORE ANY PAVEMENT IS OPENED TO TRAFFIC.

MAINTAINING TRAFFIC (WEST END OF PROJECT)

NOTE: FOR MAINTAINING TRAFFIC EAST END OF PROJECT SEE SHEETS 116 TO 123 .

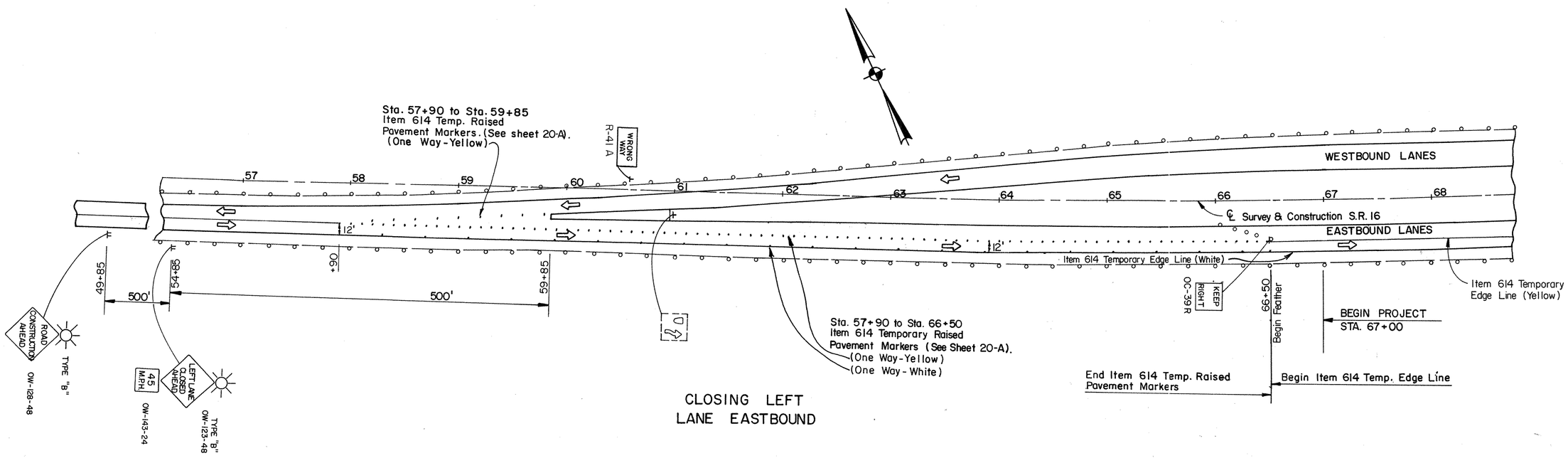

CLOSING LEFT LANE EASTBOUND

NOTE:
All existing R.P.M. West of Sta. 66+50 to remain. When existing R.P.M. conflict with the proposed traffic pattern the contractor shall remove the reflectors only. After traffic has been returned to its original pattern the contractor shall replace the same reflectors. The cost of removing and replacing the reflectors shall be incidental to Item 614 Temp. Raised Pavement Markers.

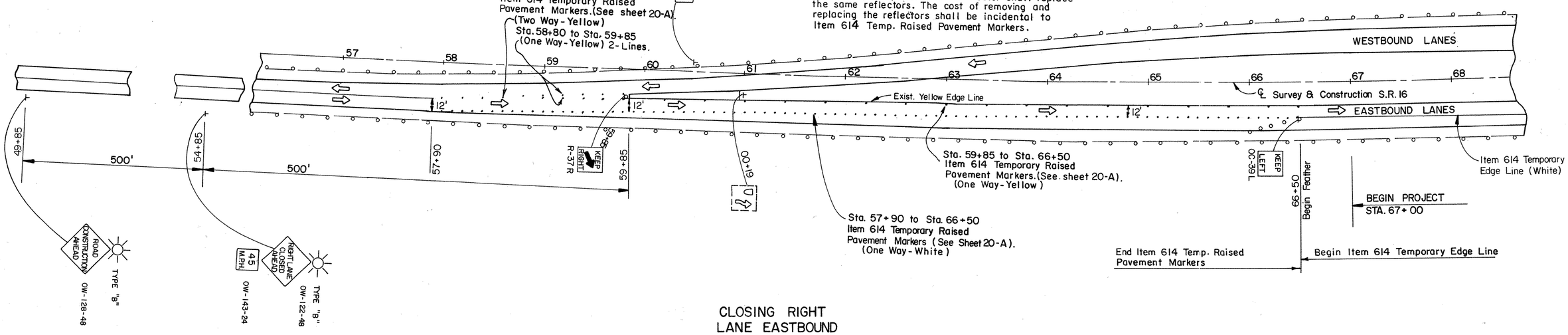

CLOSING RIGHT LANE EASTBOUND

DETOUR MAPS

CALC. BY	DATE 1-3-89	LIC-37-15.61	OHIO	11
CHKD. BY	DATE 1-18-89	LIC-16-14.26	FHWA REGION 5	123

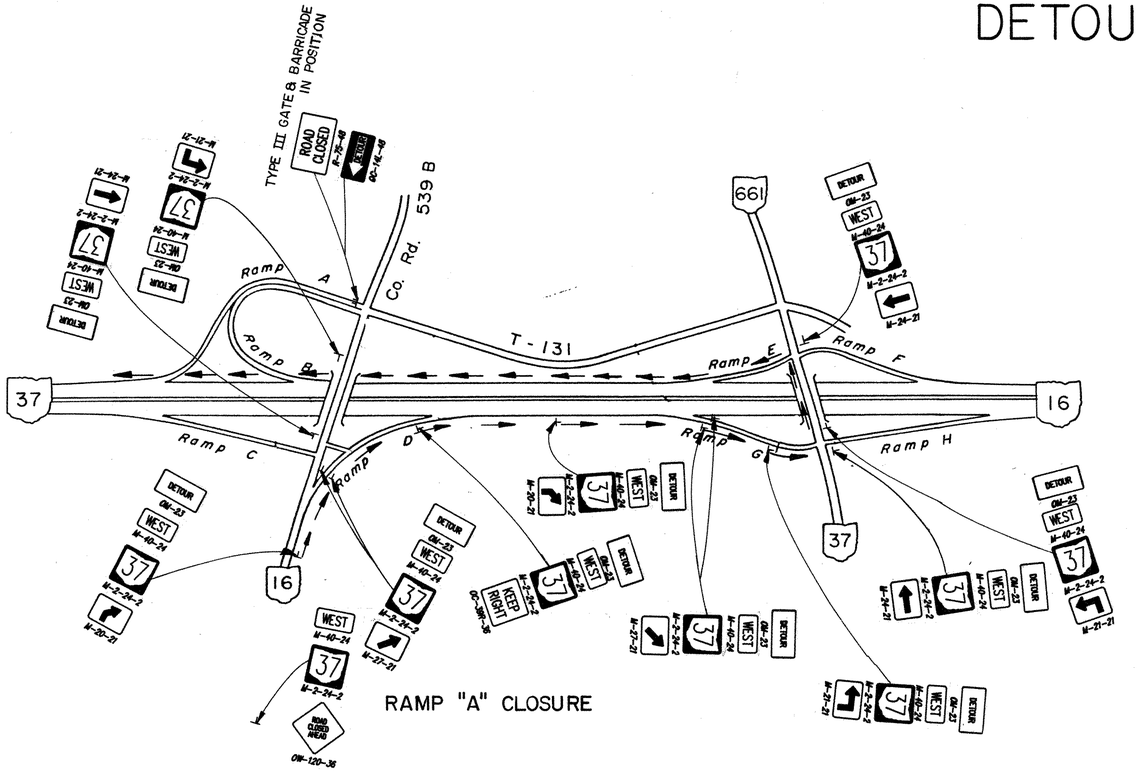

RAMP "A" CLOSURE

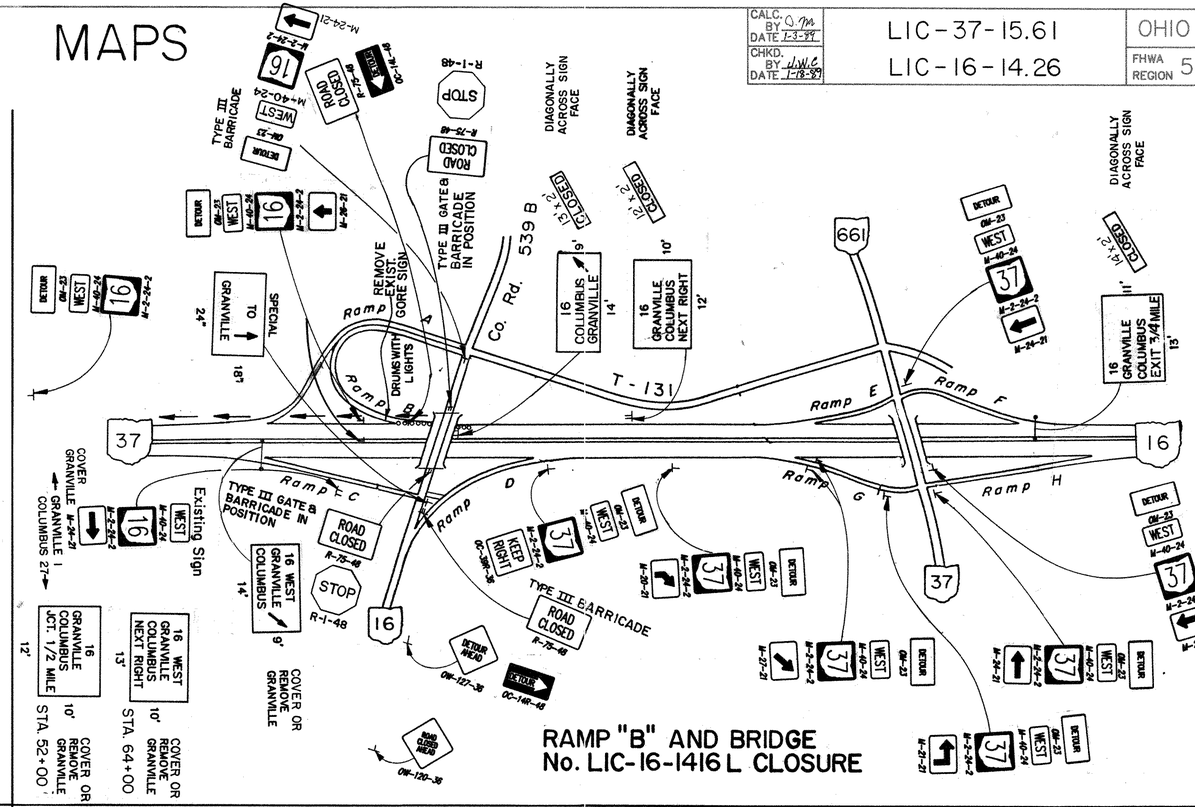

RAMP "B" AND BRIDGE
No. LIC-16-1416 L CLOSURE

NOTE: FOR ALL CLOSURES THIS SHEET, When maintaining traffic in one lane on the mainline dualed signs for the closed lane shall be omitted.

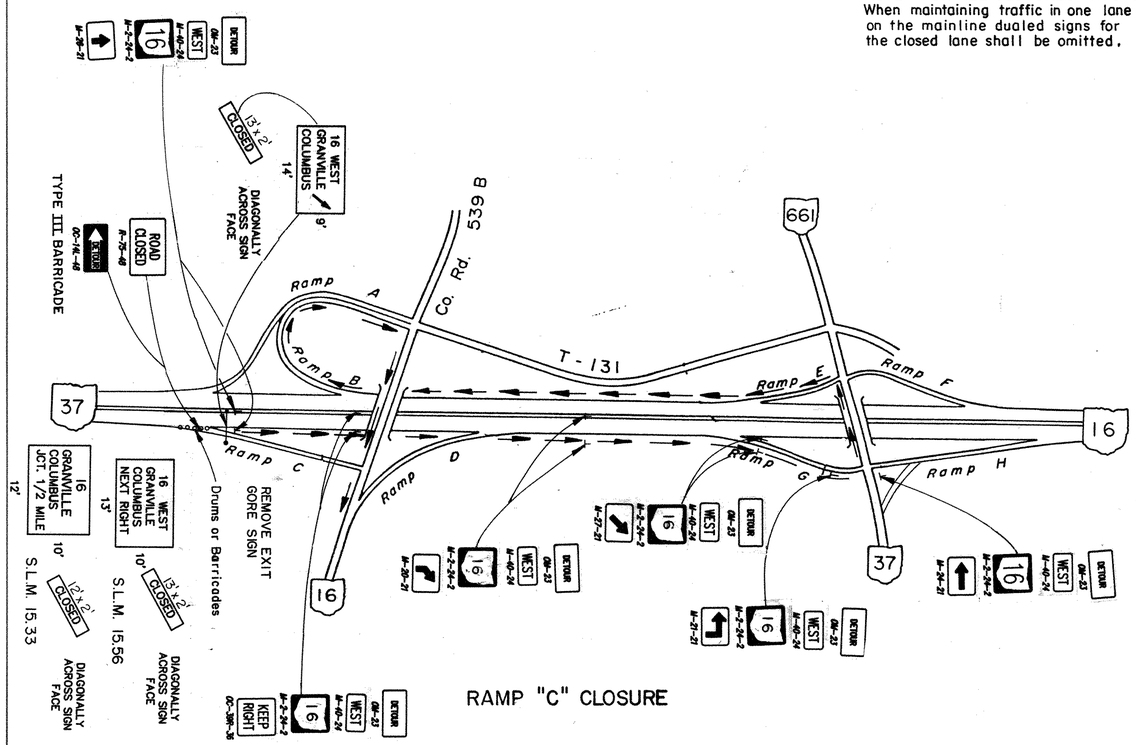

RAMP "C" CLOSURE

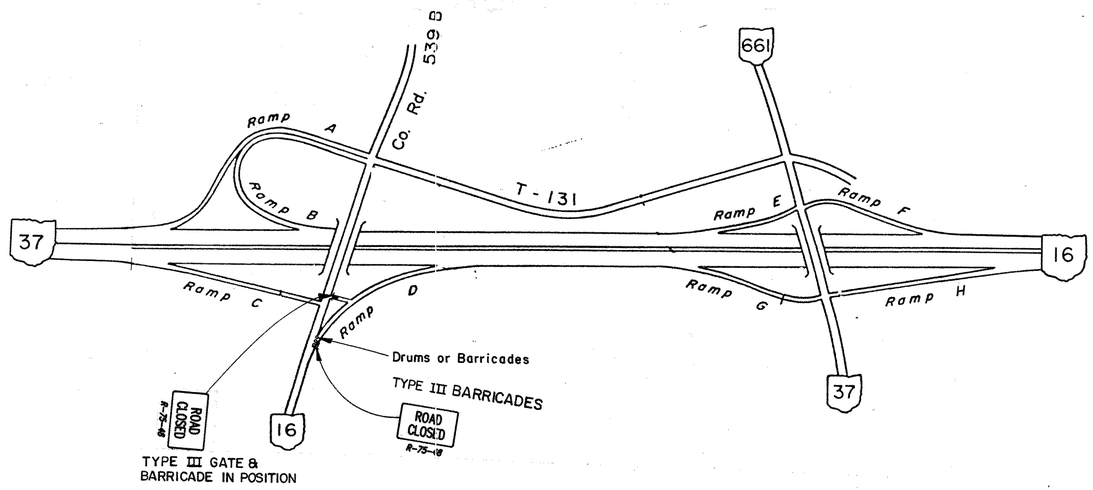

RAMP "D" CLOSURE

ALL "CLOSED" SIGNS THIS SHEET; DESIGN LEVEL 15" CAPITAL.

DETOUR MAPS

CALC. BY / DATE	LIC-37-15.61	OHIO	11-A
CHKD. BY / DATE	LIC-16-14.26	FHWA REGION 5	123

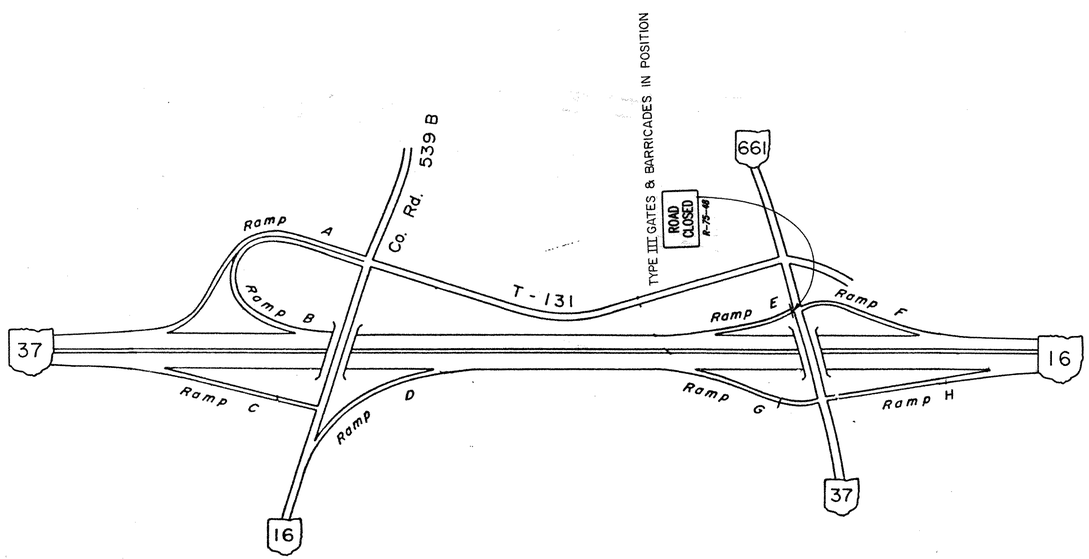

RAMP "E" CLOSURE

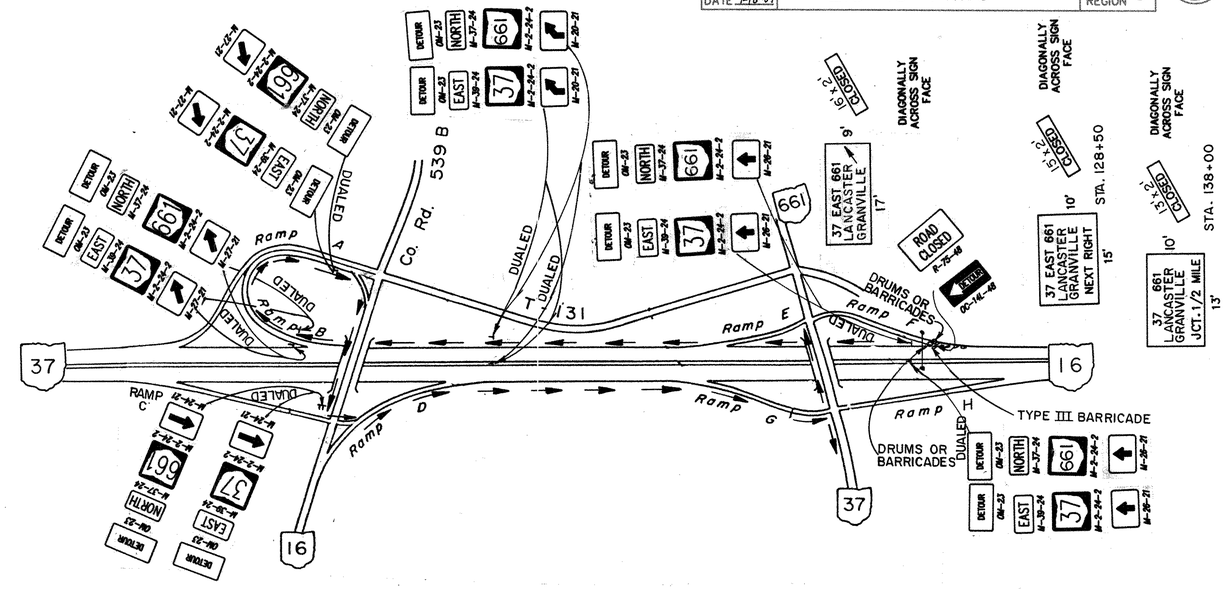

RAMP "F" CLOSURE

NOTE: FOR ALL CLOSURES THIS SHEET.
When maintaining traffic in one lane on the mainline dualed signs for the closed lane shall be omitted.

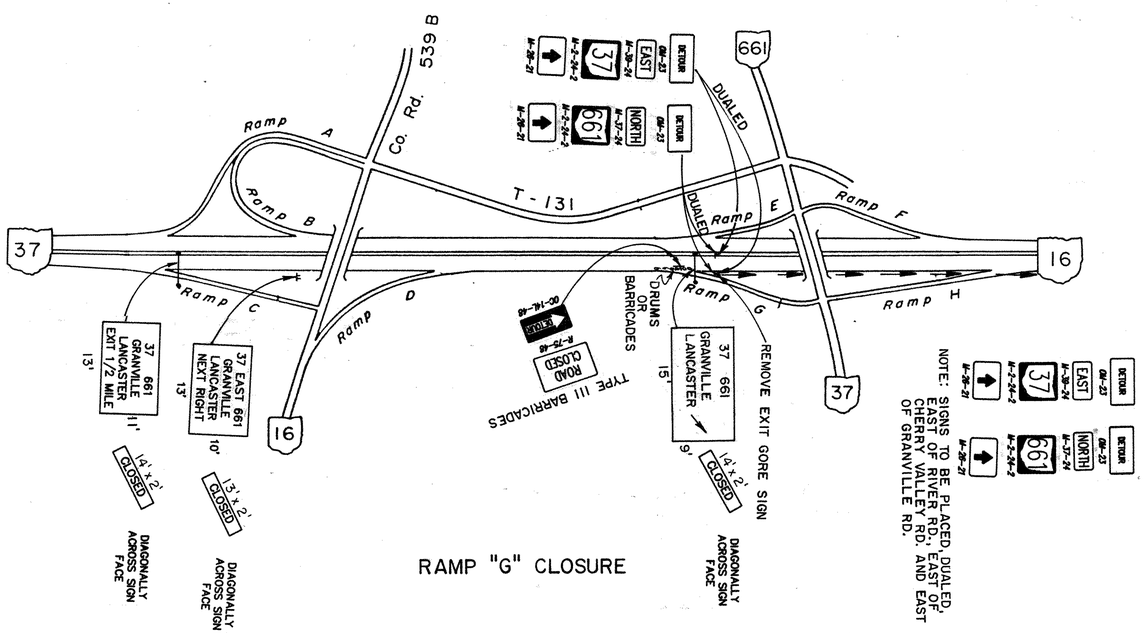

RAMP "G" CLOSURE

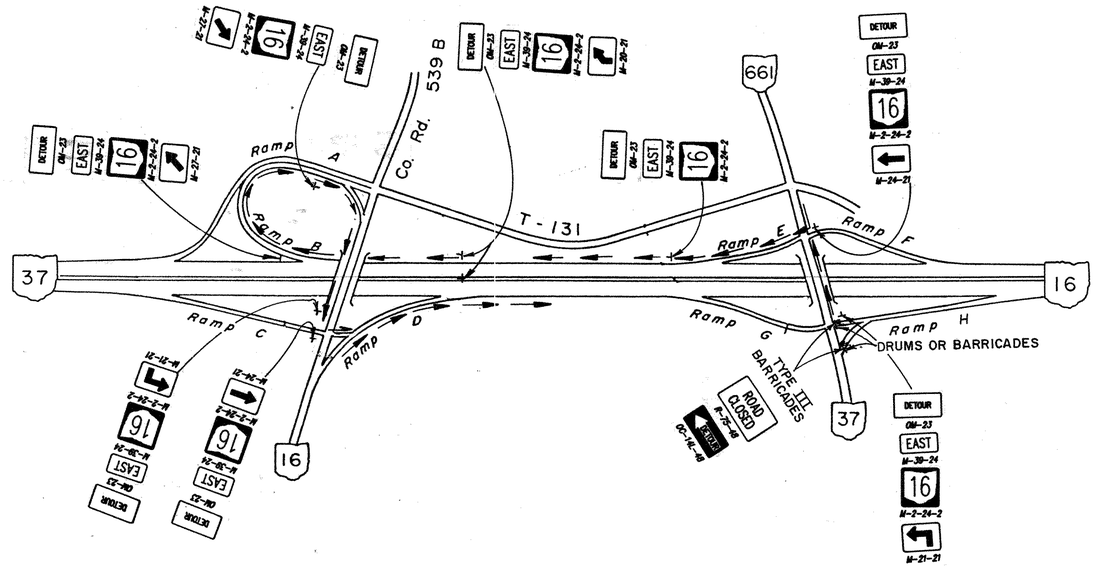

RAMP "H" CLOSURE

ALL "CLOSED" SIGNS THIS SHEET: DESIGN LEVEL 15" CAPITAL.

DETOUR MAPS

CALC. BY Dmo DATE 1-3-97	LIC-37-15.61	OHIO	11-B
CHKD. BY MWB DATE 1-15-97	LIC-16-14.26	FHWA REGION 5	123

NOTE: FOR THAT PORTION OF GRANVILLE RD. (LINE A-B) NOT REQUIRING ITEM SPECIAL CRACK & SEAT EXISTING RIGID PAVEMENT, TRAFFIC SHALL BE CONTROLED AS PER SHEET 115-A.

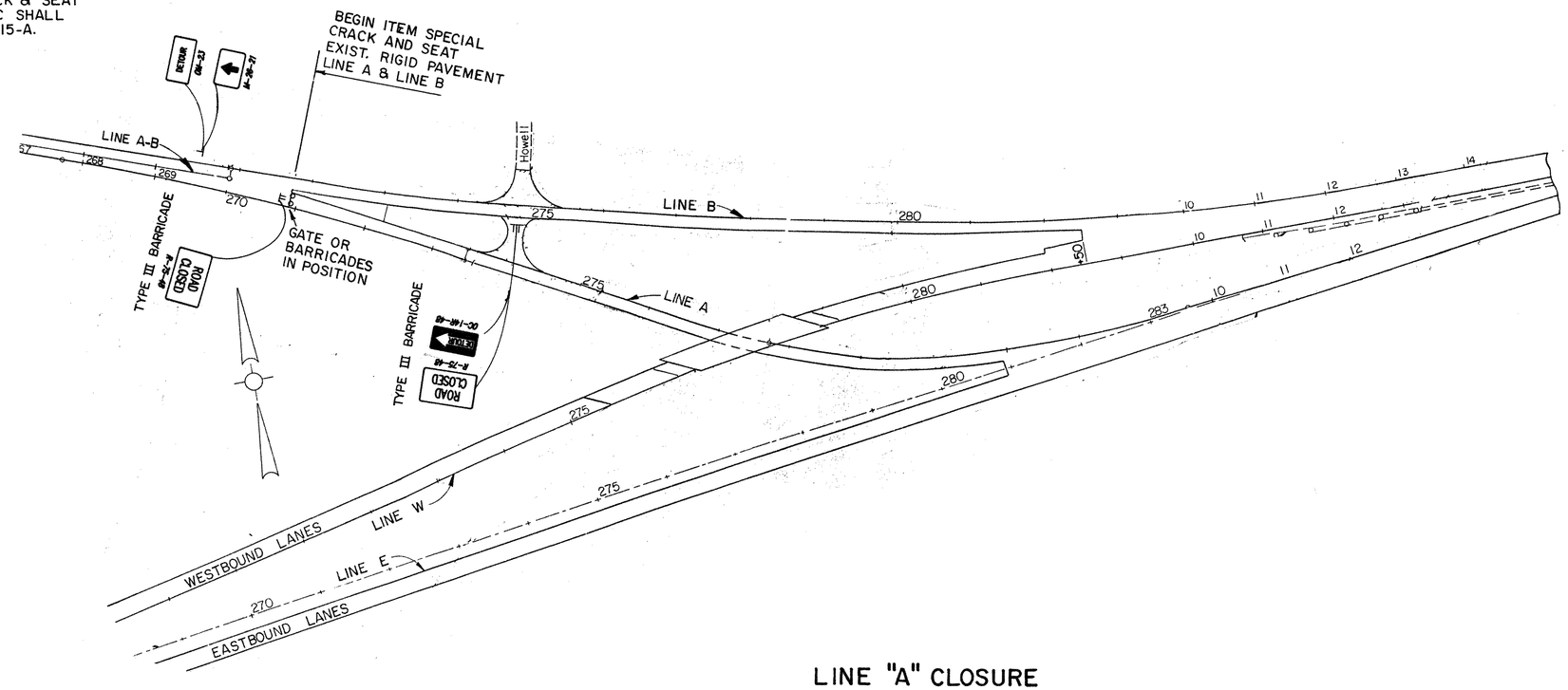

LINE "A" CLOSURE

NOTE: FOR THAT PORTION OF GRANVILLE RD. (LINE A-B) NOT REQUIRING ITEM SPECIAL-CRACK & SEAT EXIST. RIGID PAVEMENT AND LINE B AS SHOWN, TRAFFIC SHALL BE CONTROLED AS PER SHEET 115-A.

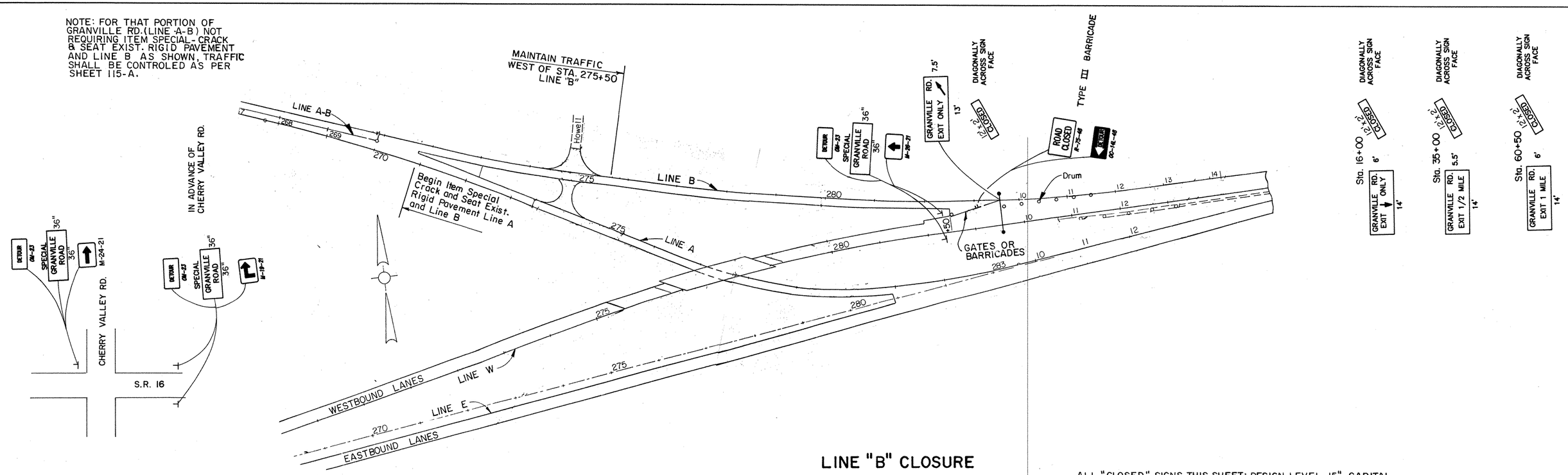

LINE "B" CLOSURE

ALL "CLOSED" SIGNS THIS SHEET: DESIGN LEVEL 15" CAPITAL.

MAINTAINING TRAFFIC

CALC. BY	
DATE	1-3-89
CHECK. BY	
DATE	1-18-89

FHWA REGION	STATE	PROJECT	
5	OHIO		

12
123

LIC-37-15.61
LIC-16-14.26

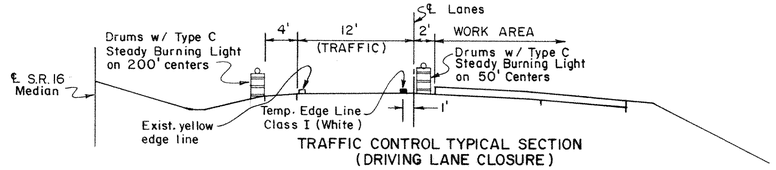

TRAFFIC CONTROL TYPICAL SECTION
(DRIVING LANE CLOSURE)

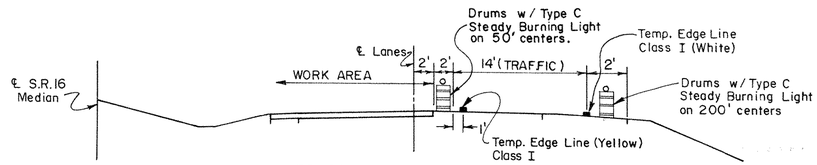

TRAFFIC CONTROL TYPICAL SECTION
(PASSING LANE CLOSURE)

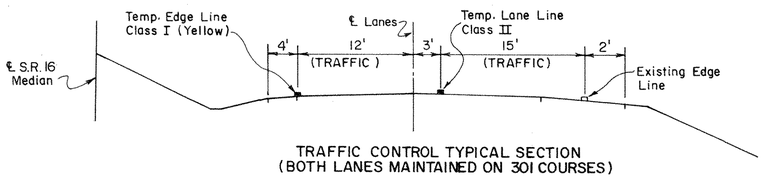

TRAFFIC CONTROL TYPICAL SECTION
(BOTH LANES MAINTAINED ON 301 COURSES)

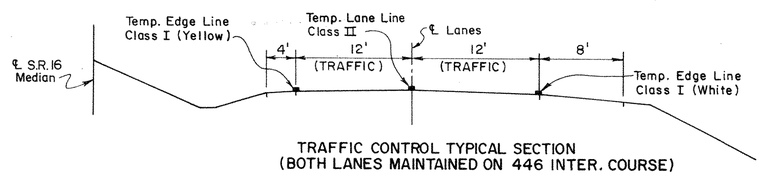

TRAFFIC CONTROL TYPICAL SECTION
(BOTH LANES MAINTAINED ON 446 INTER. COURSE)

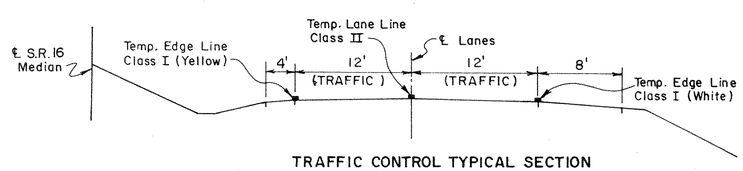

TRAFFIC CONTROL TYPICAL SECTION
(BOTH LANES MAINTAINED ON 446 SURFACE COURSE)

TRAFFIC CONTROL TYPICAL SECTION
WITHOUT TEMPORARY CONCRETE BARRIER

NOTE: Underpass S.R. 16 & S.R. 37, Driving Lane Temporary Concrete Barrier shall be placed as directed by the Engineer at the time of construction to maintain Exit Ramp B to S.R. 16.

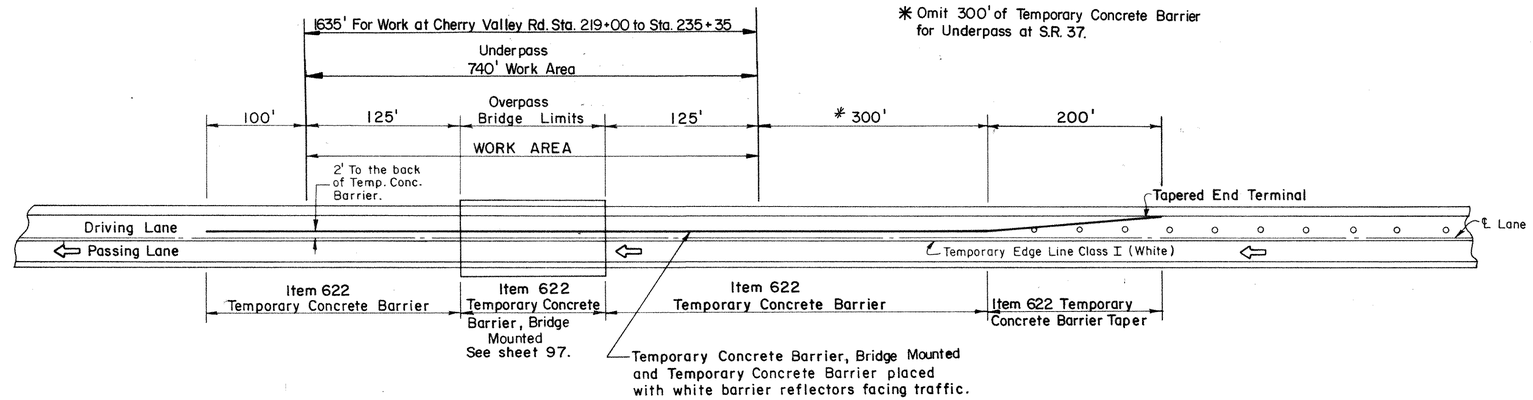

* Omit 300' of Temporary Concrete Barrier for Underpass at S.R. 37.

DETAILS CLOSING DRIVING LANE
WITH TEMPORARY CONCRETE BARRIER

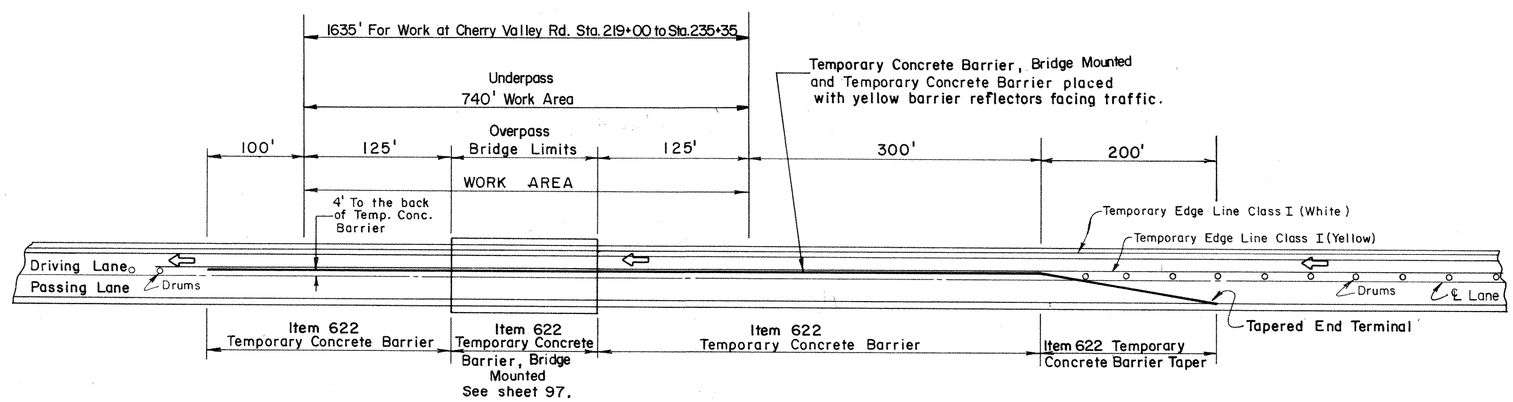

DETAILS CLOSING PASSING LANE
WITH TEMPORARY CONCRETE BARRIER

UNDERPASS DETAILS

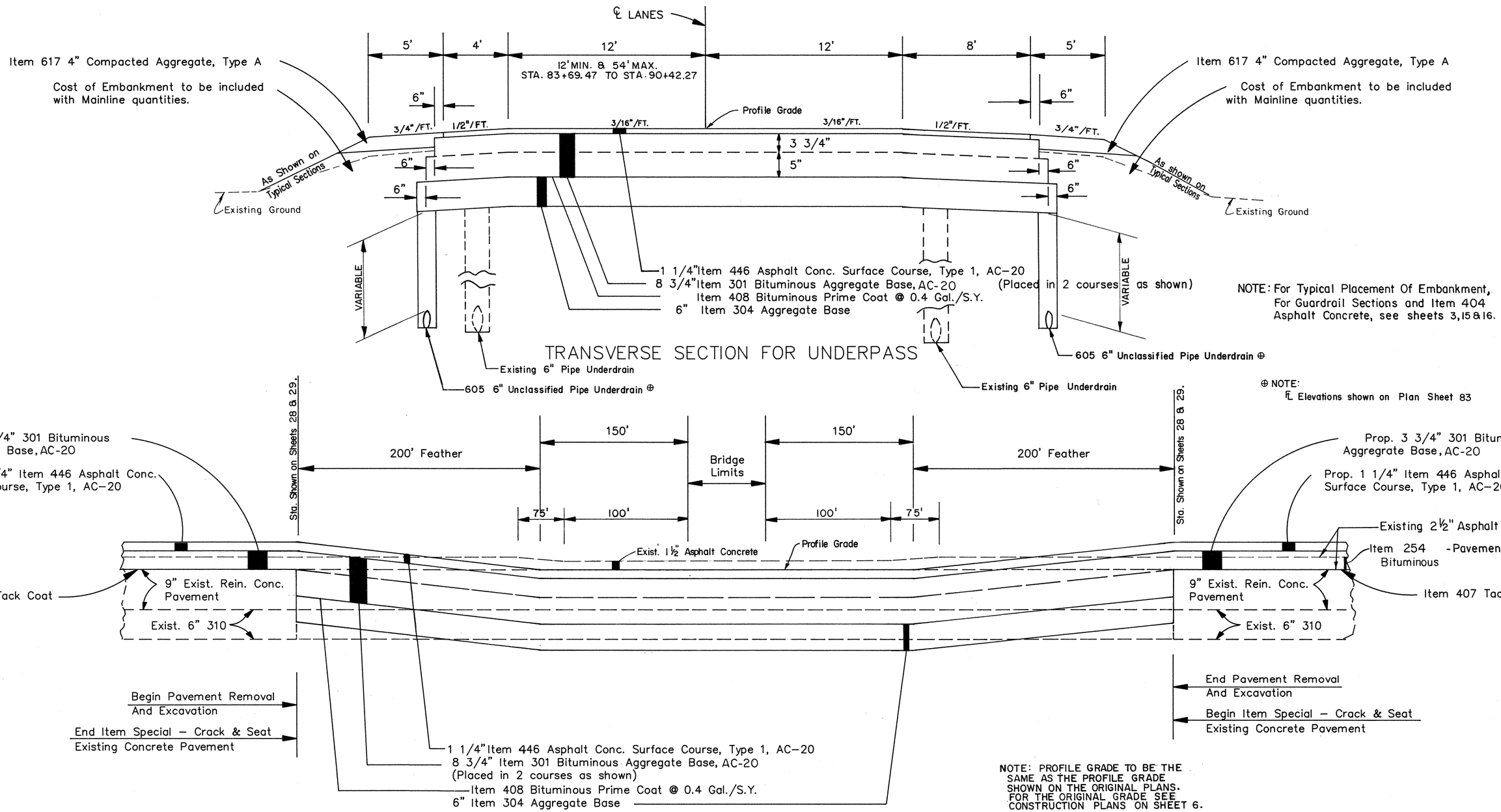

UNDERPASS - LONGITUDINAL SECTION

FED.RD. DIV.	STATE	PROJECT	
5	OHIO	.	

123
123

PAVEMENT MARKING TYPICAL DETAILS

CALC. BY D.M.
DATE 1-3-89
CHECK. BY RM
DATE 1-18-89

PLAN NO.
LIC-37-15.61
LIC-16-14.26

FREEWAY & EXPRESSWAY MAINLINE MARKINGS

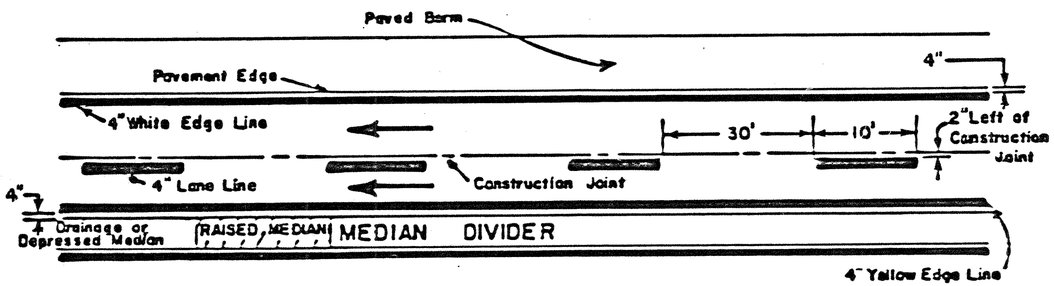

TWO LANE MARKINGS

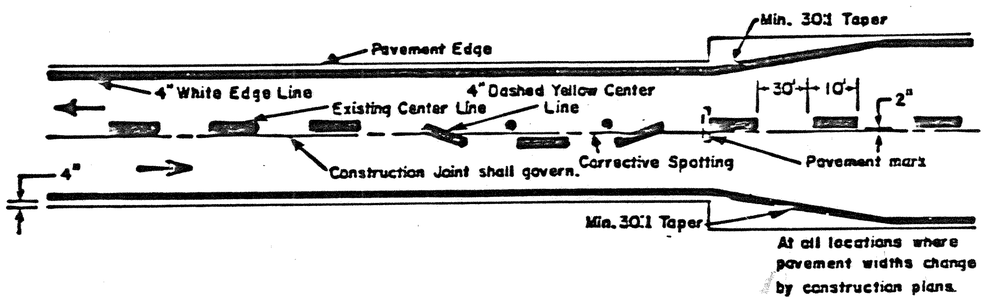

MULTILANE DIVIDED & UNDIVIDED HIGHWAY MARKINGS

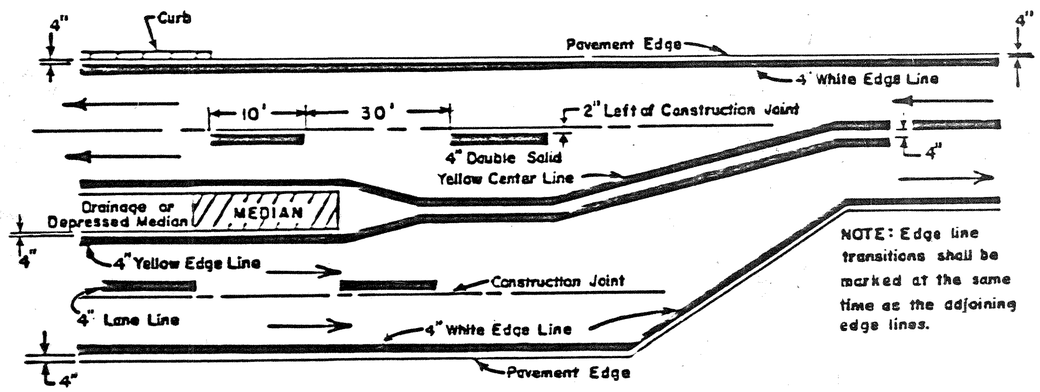

NOTE: Edge line transitions shall be marked at the same time as the adjoining edge lines.

NOTES:

1. THE DISTANCE FROM THE PAVEMENT EDGE TO THE NEARSIDE EDGE OF THE EDGELINE MAY BE INCREASED WITH THE APPROVAL OF THE ENGINEER IN ORDER TO MAINTAIN UNIFORM LANE WIDTH.

2. SEE TC 72.20 FOR PAVEMENT ENTRANCE AND EXIT RAMP TERMINALS.

OHIO DEPARTMENT OF TRANSPORTATION

PAVEMENT MARKING TYPICAL DETAILS

DATE 11/80

JDL. - CDR.

12/81

3B-2

CALC. BY DATE
CHKD. BY DATE
LIC-37-15.61
LIC-16-14.26
OHIO
FHWA REGION 5
14
123

OVERPASS DETAILS

✱ NOTE: Bridge Nº LIC-16-1594 & LIC-16-1773L are superelevated. For existing pavement elevations see former construction project, as shown on sheet 6.

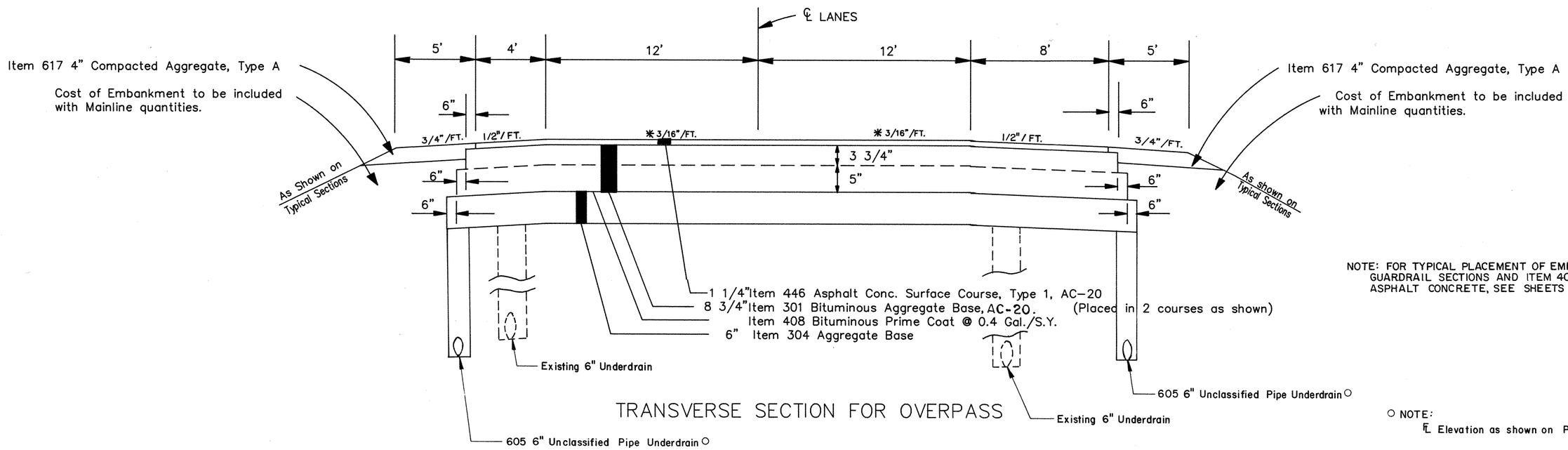

TRANSVERSE SECTION FOR OVERPASS

NOTE: FOR TYPICAL PLACEMENT OF EMBANKMENT, GUARDRAIL SECTIONS AND ITEM 404 ASPHALT CONCRETE, SEE SHEETS 3,15 & 16

○ NOTE:
℄ Elevation as shown on Plan Sheet 84 & 89.

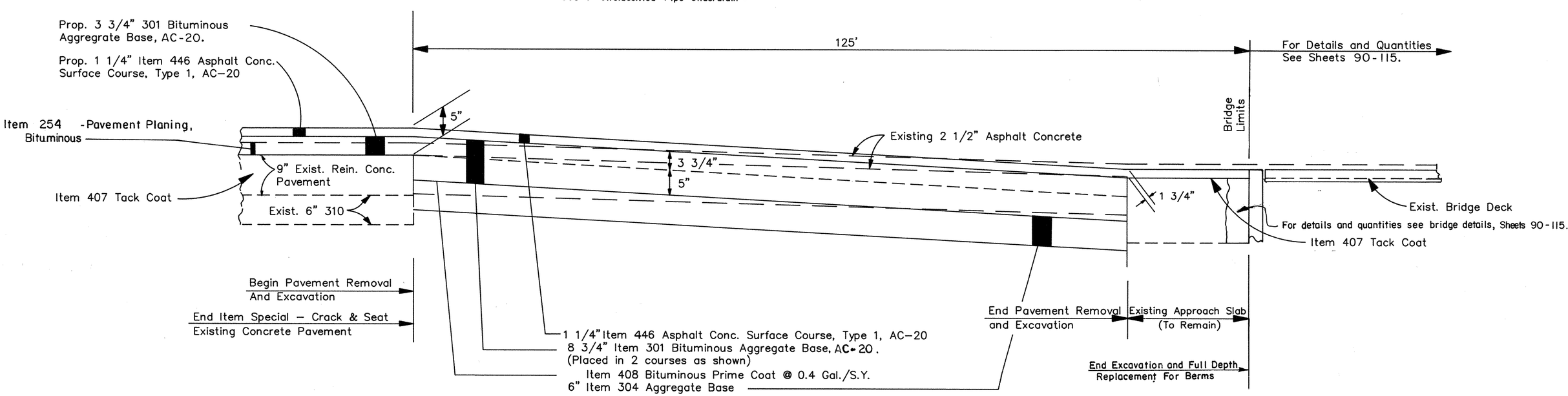

OVERPASS – LONGITUDINAL SECTION

GUARDRAIL DETAILS

CALC. BY Q.W. DATE 1-3-2?	LIC-37-15.61	OHIO	15
CHKD. BY D.W.C. DATE 1-13-2?	LIC-16-14.26	FHWA REGION 5	123

LOCATION OF GUARDRAIL:
THE LOCATION OF GUARDRAIL RUNS ARE SUBJECT TO ADJUSTMENT PRIOR TO FINAL ACCEPTANCE. THE ENGINEER SHALL BE SATISIFIED THAT ALL INSTALLATIONS WILL AFFORD MAXIMUM PROTECTION FOR TRAFFIC.

TAPER TO EXISTING BRIDGES:
PROPOSED GUARDRAIL THAT HAS TO BE ADJUSTED TO MEET AN EXISTING BRIDGE SHALL BE TAPERED AT THE RATE OF 25 TO 1 (25 : 1)

BRIDGE APPROACH GUARDRAIL:
BRIDGE APPROACH GUARDRAIL STATION AS SHOWN SHALL BE ADJUSTED BY THE PROJECT ENGINEER TO CONFORM TO STD. DRWG. GR-3, TYPE A.

GUARDRAIL OVER CULVERTS:
WHEN SUFFICIENT POST DEPTH IS NOT AVAILABLE DUE TO A CULVERT, GUARDRAIL POSTS DIRECTLY OVER THE CULVERT SHALL BE SET IN HOLES, ENCASED IN A MINIMUM OF 4" THICKNESS OF CLASS C CONCRETE FOR THE FULL DEPTH OF THE HOLE, OR AS DETAILED ON GR-1 FOR INLET MOUNTED POSTS. METHOD SHALL BE APPROVED BY THE ENGINEER. PAYMENT FOR THE ABOVE SHALL BE INCLUDED IN THE UNIT PRICE BID FOR THE APPLICABLE GUARDRAIL ITEM.

EXISTING STATION TO STATION (EASTBOUND) FROM	TO	202 GUARDRAIL REMOVED LIN.FT.	606 GUARDRAIL TYPE 5 AS PER PLAN LIN.FT.	606 ANCHOR ASSEM. TYPE A EACH Single	Barr.	606 GUARDRAIL TYPE 5 LIN.FT.	606 BRIDGE TERMINAL ASSEMBLY TYPE A EACH		606 ANCHOR ASSEM. TYPE T EACH	SEE STANDARD DRAWING	606 GUARDRAIL POST INSTALLED SEE STAND. DRWG. GR-6A EACH	408 BITUMINOUS PRIME COAT @0.4 GAL. PER SQ.YD. AS PER PLAN GAL.	404 ASPHALT CONCRETE AC-20 CU.YD.	GUARDRAIL FLARE OFFSET DISTANCE	PROPOSED STATION TO STATION (Same as existing except as noted) FROM	TO
STATE & FEDERAL																
66+50 ±	76+37.5	987.5	975.0						1	GR-2B,GR-4A	4	260.0	36.1		STA.66+50 ± To be connected to exist. guardrail	
84+70.25	88+57.75	387.5		1		112.5	1			GR-3,GR-4,GR-5				8.31'	85+42.3	86+79.8
101+32	103+07	175.0	137.5	1					1	GR-2B,GR-4,GR-4A	4	36.7	5.1	1.5'		
110+37.5	112+50	212.5	175.0	1					1	GR-2B,GR-4,GR-4A	8	46.6	6.5	1.5'		
145+57.5	163+82.5	1825.0	1800.0	1			1			GR-2B,GR-4,GR-3		480.0	66.7	1.5'		
165+81	181+98.5	1617.5	1617.5				2			GR-2B,GR-3		431.3	59.9			
184+05.5	209+05.5	2500.0	2487.5				1		1	GR-2B,GR-3,GR-4A		663.3	92.1			
214+00	216+00	200.0	162.5	1					1	GR-2B,GR-4,GR-4A		43.3	6.0	1.5'		
247+30	259+77.84 NEWARK CORP.	1247.84	1222.84	1						GR-2B,GR-4		326.1	45.3	1.5'		
TOTALS STATE & FEDERAL		9,152.84	8,577.84	6		112.5	5		5		16	2287.3	317.7			
CITY, STATE & FEDERAL																
259+77.84 NEWARK CORP.	265+67.5	589.66	577.16						1	GR-2B,GR-4A		153.9	21.4			
271+87.5	273+62.5	175.0	25.0	1		100.0			1	GR-2B,GR-4,GR-4A,GR-5	4	6.7	0.9	8.31'	271+75	273+37.5
276+25.5	11+98.32 ±	962.5	837.5	1		100.0				GR-2B,GR-4,GR-5		223.3	31.0	8.31'	STA.11+98.32 ± To be connected to exist. guardrail	
275+75 LINE A	278+62.5 LINE A	287.5	250.0	1					1	GR-2B,GR-4,GR-4A	7	66.7	9.3	1.5'		
275+15 LINE A	277+90 LINE A	275.0	237.5	1					1	GR-2B,GR-4,GR-4A	7	63.3	8.8	1.5'		
263+05.5 ± GRANVILLE RD.	264+68 GRANVILLE RD.	162.5	137.5	1						GR-2B,GR-4		36.6	5.1	1.5'	STA.263+05.5 ± To be connected to exist. guardrail	
TOTALS CITY, STATE & FEDREAL		2,452.16	2,064.66	5		200.0			4		18	550.5	76.5			

TOTALS CARRIED TO GENERAL SUMMARY

NOTE: For details not shown see sheet 3.

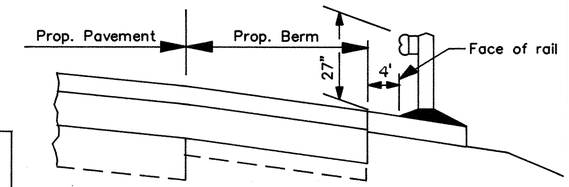

TYPICAL PLACEMENT OF GUARDRAIL MAINLINE

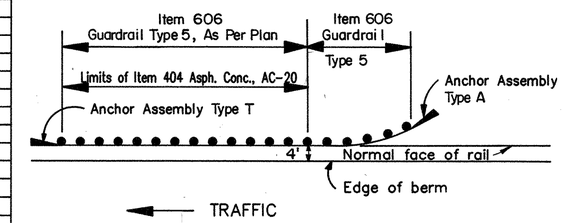

TYPICAL PLACEMENT OF ITEM 404 FOR GUARDRAIL SECTIONS

GUARDRAIL DETAILS

EXISTING STATION TO STATION (WESTBOUND) FROM	TO	202 GUARDRAIL REMOVED LIN.FT.	606 GUARDRAIL TYPE 5 AS PER PLAN LIN.FT.	606 ANCHOR ASSEM. TYPE A EACH Single	Barr.	606 GUARDRAIL TYPE 5 LIN.FT.	606 BRIDGE TERMINAL ASSEMBLY TYPE A EACH		606 ANCHOR ASSEM. TYPE T EACH	SEE STANDARD DRAWING	606 GUARDRAIL POST INSTALLED SEE STAND. DRWG. GR-6A EACH	408 BITUMINOUS PRIME COAT @0.4 GAL. PER SQ.YD. AS PER PLAN GAL.	404 ASPHALT CONCRETE AC-20 CU.YD.	GUARDRAIL FLARE OFFSET DISTANCE	PROPOSED STATION TO STATION (Same as existing except as noted) FROM	TO
STATE & FEDERAL																
66+61 ±	75+14.94 Ramp A		850.0									226.7	31.5			
75+14.94 Ramp A	90+70 Ramp AB	2450.0		1		1575.0				GR-2B,GR-4					STA.66+61 ± To be connected to exist. guardrail	
753+43.25 Ramp AB	754+50 S.R.16													1.5'		
86+75	91+00	425.0		1		162.5	1			GR-3,GR-4,GR-5				8.31'	87+75.6	89+63.1
97+75	103+25	550.0	512.5	1					1	GR-2B,GR-4,GR-4A	4	136.7	19.0	1.5'		
110+37.5	113+00	262.5		1		112.5	1			GR-3,GR-4,GR-5				8.31'	111+72.3	113+09.8
119+00	120+75	175.0	137.5	1					1	GR-2B,GR-4,GR-4A	4	36.7	5.1	1.5'		113+09.8
144+58	164+08	1950.0	1937.5				1		1	GR-2B,GR-3,GR-4A		516.7	71.8			
166+06	180+90	1484.0	1484.0				2			GR-2B,GR-3		395.7	55.0			
182+98.5	214+98.5	3200.0	3175.0	1			1			GR-2B,GR-3,GR-4		846.7	117.6	1.5'		
249+00	259+77.84 NEWARK CORP.	1077.84	1065.34						1	GR-2B,GR-4A		284.1	39.5			
TOTALS STATE & FEDERAL		11,574.34	9,161.84	6		1850.0	6		4		8	2443.3	339.5			
CITY, STATE & FEDERAL																
259+77.84 NEWARK CORP.	265+75	597.16	472.16	1		100.0				GR-5,GR-2B,GR-4		125.9	17.5	8.31'		
274+84.5	276+22	137.5	125.0				1		1	GR-2B,GR-3,GR-4A		33.3	4.6			
278+34	280+96.5	262.5	237.5	1			1			GR-2B,GR-3,GR-4		63.3	8.8	1.5'		
275+66.5 LINE B	14+14.32 ± W.B.LANE	1250.0	1237.5						1	GR-2B,GR-4A	4	330.0	45.8		STA.14+14.32 ± To be connected to exist. guardrail	
TOTALS CITY,STATE & FEDERAL		2,247.16	2,072.16	2		100.0	2		2		4	552.5	76.7			

(TOTALS CARRIED TO GENERAL SUMMARY)

NOTE: For details not shown see sheet 3.

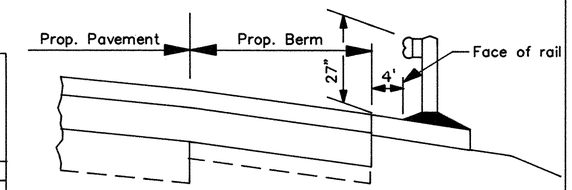

TYPICAL PLACEMENT OF GUARDRAIL (MAINLINE)

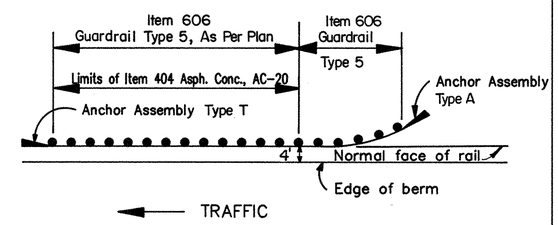

TYPICAL PLACEMENT OF ITEM 404 FOR GUARDRAIL SECTIONS

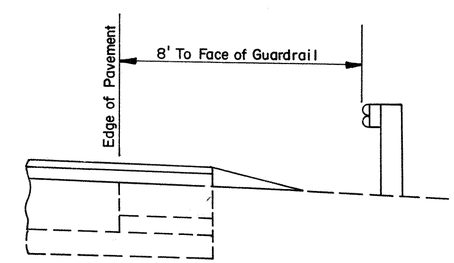

TYPICAL PLACEMENT OF GUARDRAIL (RAMPS)
(Ramp A & AB Sta. 74+14.94 – Sta. 754+50 S.R. 16)

GUARDRAIL DETAILS

EXISTING STATION TO STATION (RAMPS & MEDIAN) FROM	TO	202 GUARDRAIL REMOVED LIN.FT.	606 GUARDRAIL TYPE 5 AS PER PLAN LIN.FT.	606 ANCHOR ASSEM. TYPE A EACH Single	Barr.	606 BRIDGE TERMINAL ASSEMBLY EACH TYPE F, As Per Plan (SEE GEN. NOTE)	TYPE A	606 GUARDRAIL TYPE 5 LIN. FT. SINGLE	BARRER	606 ANCHOR ASSEM. TYPE T EACH	SEE STANDARD DRAWING	606 GUARDRAIL POST INSTALLED SEE STAND. DRWG. GR-6A EACH	408 BITUMINOUS PRIME COAT @0.4 GAL. PER SQ.YD. AS PER PLAN GAL.	404 ASPHALT CONCRETE AC-20 CU.YD.	GUARDRAIL FLARE OFFSET DISTANCE	PROPOSED STATION TO STATION (Same as existing except as noted) FROM	TO
STATE & FEDERAL																	
RAMPS																	
S.R.16																	
749+84 S.R.16	90+78 LINE BB	225.0	200.0	1			1				GR-2B,GR-3,GR-4		53.3	7.4	1.5'		
80+77 RMP. C	742+34 S.R.16	775.0		2				725.0			GR-2B,GR-4				1.5'		
749+93 S.R.16	1+62.5 T.R.131	425.0	412.5				1			1	GR-2B,GR-3,GR-4A		110.0	15.3	1.5'		
85+84.5 RMP.C	747+12 S.R.16	200.0	175.0	1			1				GR-2B,GR-3,GR-4		46.7	6.5	1.5'		
747+25.5 S.R.16	89+16 RMP.D	462.5	450.0				1			1	GR-2B,GR-3,GR-4A		120.0	16.7			
83+73 RMP.D	90+29.5 RMP.D	662.5		1				725.0		1	GR-2B,GR-4,GR-4A				1.5'	83+10.5 RMP. D	90+29.5 RMP. D
S.R.37																	
110+54 RMP.G	365+57 S.R.37	387.5		2				337.5			GR-2B,GR-4				1.5'		
111+20 RMP.G	368+95 S.R.37	175.0	150.0	1		1					GR-2B,GR-3A		40.0	5.6	1.5'		
109+28 RMP.E	373+28 S.R.661	200.0		1				162.5		1	GR-2B,GR-4,GR-4A				1.5'		
371+60.5 S.R.661	110+33 RMP.F	150.0	137.5			1				1	GR-2B,GR-3A-GR-4A		36.7	5.1			
368+88 S.R.37	119+89.5 RMP.H	837.5				1		825.0		1	GR-2B,GR-3A-GR-4A						
364+87 S.R.37	118+57.5 RMP.H	787.5	762.5							2	GR-2B,GR-4A		203.3	28.2		Type T to be placed at drive as per Std. Drwg. GR-4A.	
371+53 S.R.661	372+15.5 S.R.661	62.5	37.5	1		1					GR-2B,GR-3A		10.0	1.4	1.5'		
374+20 S.R.661	114+27 RMP.F	450.0		2				400.0			GR-2B,GR-4				1.5'		
MEDIAN E.B. LANES																	
74+60	76+35	175.0	137.5	1						1	GR-2B,GR-4,GR-4A	4	36.7	5.1	1.5'		
101+32	103+07	175.0	137.5	1						1	GR-2B,GR-4,GR-4A		36.7	5.1	1.5'		
162+28.5	163+91	162.5			1		1	112.5	25		GR-2B,GR-3,GR-4,GR-6						
179+96.5	181+59	162.5			1		1	112.5	25		GR-2B,GR-3,GR-4,GR-6						
85+82.19 S.R.16	88+69.69 S.R.16	525.0						300.0			GR-2B,GR-6A					86+53.77	87+97.11
110+20.18 S.R.37	113+07.68 S.R.37	525.0						300.0			GR-2B,GR-6A					110+91.76	112+36.10
MEDIAN W.B. LANES																	
119+00	120+75	175.0	137.5	1						1	GR-2B,GR-4,GR-4A		36.7	5.1	1.5'		
165+98	167+60.5	162.5			1		1	112.5	25		GR-2B,GR-3,GR-4,GR-6						
183+33	184+95.5	162.5			1		1	112.5	25		GR-2B,GR-3,GR-4,GR-6						
TOTALS STATE & FEDERAL		8,025	2737.5	15	4	4	8	4225	100	11		4	730.1	101.5			
CITY, STATE & FEDERAL MEDIAN																	
269+86	276+86	700.0	687.5				1			1	GR-2B,GR-3,GR-4A		183.3	25.5			
279+03.5	13+23.32	809.5	659.5				2		150		GR-2B,GR-3	4	175.9	24.4			
TOTALS CITY, STATE & FEDERAL		1,509.5	1,347.0				3		150	1		4	359.2	49.9			

(TOTALS CARRIED TO GENERAL SUMMARY)

NOTE: For details not shown see sheet 3.

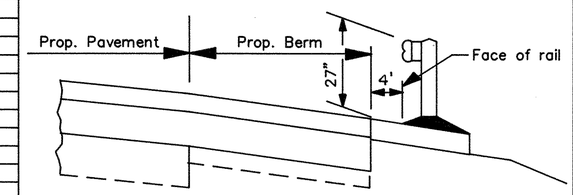

TYPICAL PLACEMENT OF ITEM 606 GUARDRAIL TYPE 5, AS PER PLAN

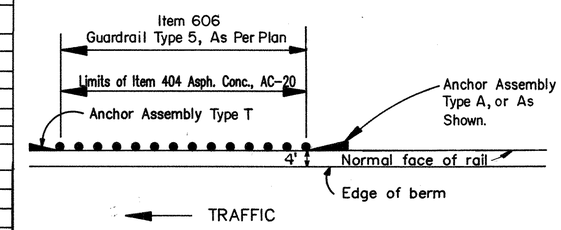

TYPICAL PLACEMENT OF ITEM 404 FOR GUARDRAIL SECTIONS

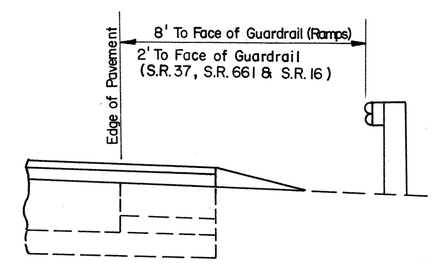

TYPICAL PLACEMENT OF ITEM 606 GUARDRAIL TYPE 5

U-TURN MEDIAN OPENINGS

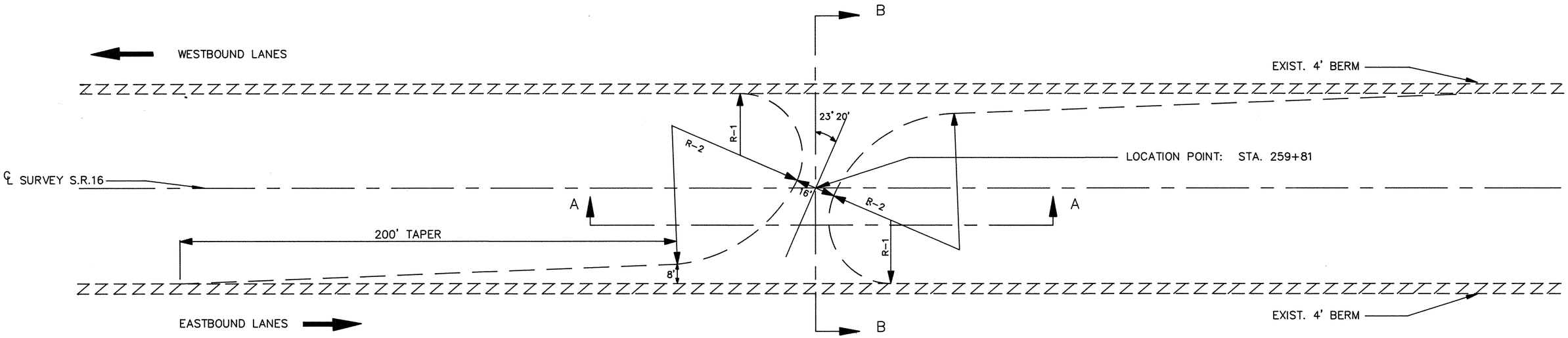

TYPICAL U - TURN MEDIAN OPENING

LEGEND

MARK	ITEM	DESCRIPTION
①	446	2 1/2" Asphalt Concrete Surface Course, Type 1, AC-20
②	407	Tack Coat

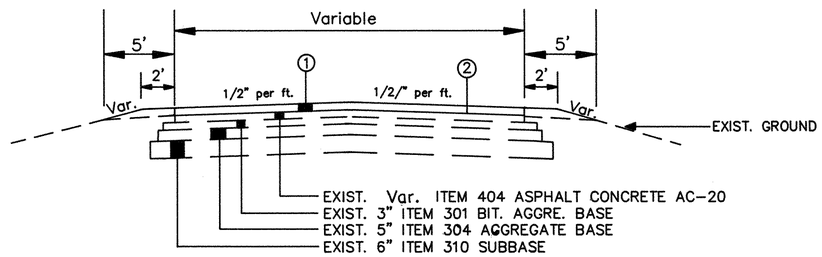

SECTION A-A

DIMENSIONS APPLICABLE TO VARYING MEDIAN WIDTHS			
M (ft)	R-1 (ft)	R-2 (ft)	AREA (yd²)
50	12.5	27.5	319.4

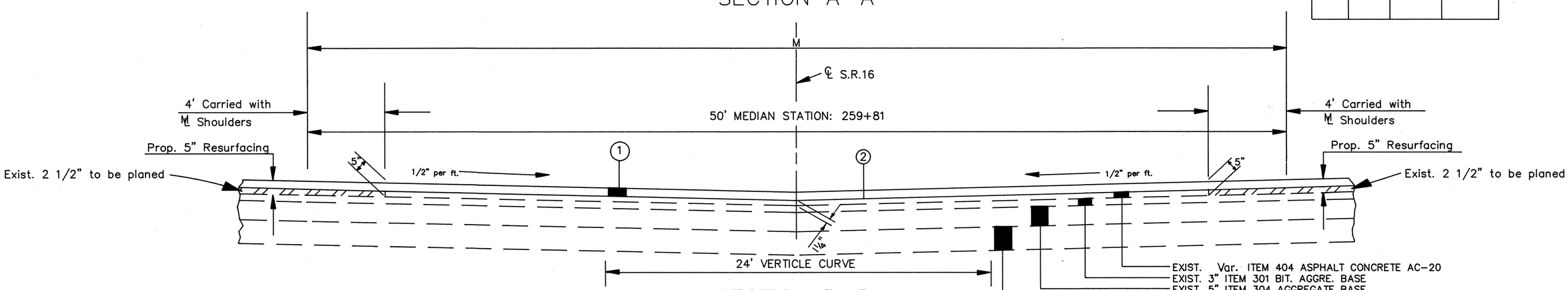

SECTION B-B

GENERAL NOTES

620 DELINEATOR BY TYPE, FLEXIBLE POST MOUNTED

THE CONTRACTOR SHALL FURNISH AND INSTALL FLEXIBLE POST MOUNTED DELINEATORS MANUFACTURED BY:

SAFE HIT CORPORATION
1930 WEST WINTON BLDG. 11
HAYWARD CA. 94545
415-783-6550

CARSONITE INTERNATIONAL
30 E. COLUMBUS ST.
OH SALES OFFICE
COLUMBUS, OHIO 43206
614-221-5987

OR AN APPROVED EQUAL

OF THE DESIGNS HEREIN.

DESIGN 2 FLEXIBLE POST MOUNTED DELINEATORS SHALL BE MANUFACTURED FROM FIBERGLASS WITH A T CROSS-SECTION. THE POST SHALL BE 72 INCHES LONG AND SHALL BE DRIVEN TO AN INSTALLATION DEPTH OF 18 INCHES INTO THE GROUND.

DESIGN 4 FLEXIBLE POST MOUNTED DELINEATORS SHALL BE BOOSTER POSTS 27 INCHES IN LENGTH, MANUFACTURED OF FIBERGLASS, WITH A T CROSS-SECTION. DESIGN 4 FLEXIBLE POST MOUNTED DELINEATORS SHALL BE INSTALLED ON THE FRONT OF WOODEN GUARDRAIL BLOCKOUTS FACING APPROACHING TRAFFIC. THE DESIGN 4 FLEXIBLE POST MOUNTED DELINEATOR SHALL BE ATTACHED BY HAMMERING INTO THE BLOCKOUT EITHER TWO 5/16 INCH DIAMETER BY 1.25 INCH LONG, ZINC COATED LAG SCREWS WITH ZINC COATED 5/16 INCH FLAT WASHER OR TWO 5/16 INCH DIAMETER BY 1.25 INCH LONG, ZINC COATED INDENTED HEX WASHER-HEAD LAG SCREWS. ZINC COATED INDENTED HEX WASHER-HEAD LAG SCREWS MAY BE OBTAINED FROM:

TENNESSEE BOLT AND SCREW COMPANY
MEMPHIS TENN.
901-452-7491

-OR-

MID STATE BOLT AND NUT COMPANY
COLUMBUS OH
614-253-8631

EIGHT WEEKS SHOULD BE ALLOWED FOR DELIVERY FROM THESE FASTNER SUPPLIERS. THE LAG SCREWS AND WASHERS SHALL BE FURNISHED BY THE CONTRACTOR.

THE FLEXIBLE POST MOUNTED DELINEATORS SHALL BE FURNISHED WITH REFLECTORS ATTACHED. THE REFLECTORS SHALL CONSIST OF 3 INCH WIDE BY 6 INCH LONG REFLECTIVE SHEETING CONFORMING TO 730.19 ADHERED TO THE FLEXIBLE POST. THE REFLECTOR COLORS SHALL BE COLORLESS OR YELLOW AS SPECIFIED BY TYPE IN CONFORMANCE WITH 620.01.

INSTALLATION: DELINEATORS SHALL BE INSTALLED FACING TRAFFIC.
THE PROTECTIVE PAPER COVERING THE FACE OF THE FLEXIBLE POST MOUNTED REFLECTORS SHALL NOT BE REMOVED UNTIL AFTER INSTALLATION. POSTS SHALL BE INSTALLED SO THAT THE FACE OF THE REFLECTOR IS 90 DEGREES TO THE CENTERLINE FACING APPROACHING TRAFFIC AND TO SUCH A DEPTH THAT THE TOPS OF THE INSTALLED REFLECTORS SHALL BE 48 INCHES PLUS OR MINUS 1 INCH ABOVE THE ELEVATION OF THE ADJACENT EDGE OF PAVEMENT. POSTS SHALL BE ERECTED VERTICALLY AND SHALL NOT BE MORE THAN 1/4 INCH PER FOOT OUT OF PLUMB POSITION IN ANY DIRECTION. DELINEATOR POSTS SHALL BE INSTALLED BY DRIVING USING ONLY MANUAL TECHNIQUES.

IF SOIL CONDITIONS WOULD CAUSE THE POST TO BE OUT OF PLUMB, THE CONTRACTOR MAY DRIVE A PILOT SHAFT BEFORE INSTALLATION.

FLEXIBLE POSTS INSTALLATION METHODS AND EQUIPMENT SHALL COMPLY WITH THE POST MANUFACTURE'S RECOMMENDATIONS ON FILE WITH THE DIRECTOR UNLESS PRIOR WRITTEN APPROVAL OF ALTERNATE TECHNIQUES ARE OBTAINED FROM THE DIRECTOR.

FLEXIBLE DELINEATORS TO BE MOUNTED AS BOOSTER POSTS ON THE FRONT OF WOODEN GUARDRAIL BLOCKOUTS SHALL BE ATTACHED BY HAMMERING INTO THE BLOCKOUT EITHER TWO 5/16 INCH DIAMETER BY 1 1/4 INCH LONG, ZINC COATED LAG SCREWS WITH ZINC COATED 5/16 INCH FLAT WASHERS OR TWO 5/16 INCH DIAMETER BY 1 1/4 INCH LONG, ZINC COATED INDENTED HEX WASHER-HEAD LAG SCREWS.

DELINEATOR POSTS PLACED IN CONCRETE MEDIANS MAY BE INSTALLED BY PLACING THEM IN 4 INCH SLEEVES OR CORE DRILLED HOLES. THE HOLES SHALL BE FILLED WITH ASPHALTIC CONCRETE AFTER THE POST IS IN PROPER POSITION.

LAYOUT: THE CONTRACTOR SHALL LAYOUT ALL DELINEATOR LOCATIONS TO ASSURE THEIR PROPER PLACEMENT. THE LAYOUT SHALL BE APPROVED BY THE ENGINEER BEFORE INSTALLATION OPERATIONS ARE STARTED. THE LAYOUT SHALL BE INCIDENTAL TO THE INSTALLATION OPERATIONS.

THIS WORK SHALL CONSIST OF LOCATING AND MARKING ON THE ROADWAY THE FOLLOWING DELINEATOR FEATURES AS DETERMINED FROM THE LOCATION INFORMATION IN THE PLANS OR FROM SCHEMATICS OF HORIZONTAL CURVES AND RAMPS PROVIDED IN THE PLANS.

1) BEGINNING OF EACH RUN WITH CONSTANT SPACING OF DELINEATORS SPECIFYING DELINEATOR TYPE, COLOR, SIDE OF ROAD AND SPACING.

2) END OF EACH RUN WITH CONSTANT SPACING.

3) BEGINNING OF EACH RUN WITH VARIABLE SPACING SPECIFYING DELINEATOR TYPE, COLOR, SIDE OF ROAD AND SPACING.

4) END OF EACH RUN WITH VARIABLE SPACING.

* NOTE: Existing delineators removed on this project shall be stored at the project site as directed by the Engineer and removed by State Forces.

THE FOLLOWING QUANTITIES HAVE BEEN CARRIED TO THE GENERAL SUMMARY FOR THE ABOVE PURPOSE.

	STATE & FEDERAL		CITY, STATE & FEDERAL	
* ITEM 620 DELINEATOR REMOVED FOR STORAGE	165	EACH	22	EACH
ITEM 620 DELINEATOR, TYPE C, DESIGN 2, FLEXIBLE POST MOUNTED	91	EACH	13	EACH
ITEM 620 DELINEATOR, TYPE C, DESIGN 4, FLEXIBLE POST MOUNTED	85	EACH	14	EACH
ITEM 620 DELINEATOR, TYPE D, DESIGN 2, FLEXIBLE POST MOUNTED	54	EACH	10	EACH
ITEM 620 DELINEATOR, TYPE D, DESIGN 4, FLEXIBLE POST MOUNTED	10	EACH	2	EACH

See Standard Drawing TC-61.10

LOCATION	ITEM 620				
	DELINEATOR REMOVED FOR STORAGE	DELINEATOR, TYPE C DESIGN 2, FLEXIBLE POST MOUNTED	DELINEATOR, TYPE C DESIGN 4, FLEXIBLE POST MOUNTED	DELINEATOR, TYPE D DESIGN 2, FLEXIBLE POST MOUNTED	DELINEATOR, TYPE D DESIGN 4, FLEXIBLE POST MOUNTED
	EACH	EACH	EACH	EACH	EACH
RAMP A,B,A-B&B-B		8	21	28	
RAMP C		3	5	6	
RAMP D & D-D		10	3	5	4
RAMP E		4	4	4	2
RAMP F		5	5	4	
RAMP G		7	4	5	
RAMP H		7	4	2	4
(PROJECT)	165				
MAINLINE E.B.		22	21		
MAINLINE W.B.		25	18		
TOTALS (STATE & FED.)	165	91	85	54	10
LINE A		5	1	5	2
LINE B		2	7	5	
MAINLINE E.B.		3	4		
MAINLINE W.B.		3	2		
(PROJECT)	22				
TOTALS(CITY, STATE & FED)	22	13	14	10	2

614 BARRIER REFLECTORS

614 BARRIER REFLECTORS:

THESE REFLECTORS AND THEIR MOUNTING SHALL CONFORM TO SUPPLEMENTAL SPECIFICATION 802, EXCEPT THAT SPACING SHALL BE AS SHOWN IN THE SUB-SUMMARY TABLE.

* TO BE PLACED AT 100' SPACINGS. THE REFLECTORS SHALL BE PLACED BETWEEN PERMANENT REFLECTORS SHOWN ON SHEET 8.

SUB-SUMMARY TABLE

LOCATION	SPACING	TYPE A		TYPE B						REMARKS
		W	Y	W	Y					
STATE & FEDERAL										
E.B. OVERPASSES (2060')	50'			43	43					
W.B. OVERPASSES (2060')	50'			43	43					
W.B. UNDERPASSES										
2680'	50'				55					
2380'	50'			49						
CHERRY VALLEY RD.(2235')										
E.B.	50'			46	46					
W.B.	50'			46	46					
BRIDGE PARAPETS (PASSING LANE)										
℄ E.B. & W.B. 720'	50'				16					
GUARDRAIL (PASSING LANE)										
1175'	50'		24							
GUARDRAIL(DRIVING LANE)	*	189								
SUB-TOTALS		189	24	227	249					
CITY, STATE & FEDERAL										
W.B. OVERPASS (1040')	50'			22	22					
BRIDGE PARAPETS (PASSING LANE)	50'				5					
GUARDRAIL (PASSING LANE)										
(1500')	50'		30							
GUARDRAIL(DRIVING LANE)	*	39								
SUB-TOTALS		39	30	22	27					
TOTALS		213		476						STATE & FEDERAL
		69		49						CITY, STATE & FEDERAL

W = White
Y = Yellow

THE FOLLOWING ESTIMATED QUANTITY HAS BEEN INCLUDED IN THE GENERAL SUMMARY FOR THE ABOVE PURPOSE.

	STATE & FEDERAL	CITY, STATE & FEDERAL
ITEM 614 BARRIER REFLECTOR, TYPE A	213	69
ITEM 614 BARRIER REFLECTOR, TYPE B	476	49

STATE OF OHIO
DEPARTMENT OF TRANSPORTATION
DISTRICT FIVE

614 BARRIER REFLECTORS

STANDARD NO. D3-2E

DESIGNED	DRAWN	CHECKED	REVIEWED	DATE	REVISED
	Autocad				9/19/88

L0161430

614 TEMPORARY RAISED PAVEMENT MARKERS

CALC. BY D.M.
DATE 1-3-89
CHECK. BY J.W.C.
DATE 1-18-89

LIC-37-15.61
LIC-16-14.26

20A
123

THIS ITEM OF WORK SHALL CONSIST OF FURNISHING, INSTALLING, MAINTAINING, AND SUBSEQUENTLY REMOVING TEMPORARY RAISED PAVEMENT MARKERS (TRPM'S). THE TRPM'S SHALL BE YELLOW OR WHITE, AS DESCRIBED IN THE PLAN.

MATERIAL
ALL UNITS SHALL BE OF SUFFICIENT STRENGTH AND PROPERLY SHAPED SO AS NOT TO BE DISLODGED OR BROKEN, OR THE REFLECTOR DISLODGED OR BROKEN, OR THE REFLECTOR DISLODGED OR DAMAGED BY IMPACTS FROM VEHICLES TIRES, INCLUDING THOSE OF HIGH PRESSURE TRUCK TIRES LOADED TO 4500 POUNDS.

RETROREFLECTORS SHALL BE PROVIDED IN ONE OR TWO DIRECTIONS ON EACH UNIT AS REQUIRED BY THE USAGE AND SHALL RETURN WHITE OR YELLOW LIGHT AS IS APPROPRIATED FOR THE APPLICATION.

THE REFLECTOR SHALL HAVE AN EFFECTIVE AREA OF 0.35 SQUARE INCH FOR TYPE A OR 3.0 SQUARE INCH FOR TYPE B. ITS BRIGHTNESS OR SPECIFIC INTENSITY (WHEN TESTED AT 0.2 DEGREE ANGLE OF OBSERVATION AND THE FOLLOWING ANGLES OF INCIDENCE) SHALL MEET OR EXCEED THE FOLLOWING:

SPECIFIC INTENSITY

INCIDENCE ANGLE (DEGREES)	TYPE A WHITE	TYPE A YELLOW
0	1.0	0.6
20	0.4	0.24
45	–	–

	TYPE B WHITE	TYPE B YELLOW
0	3.0	1.8
20	1.2	0.72
45	0.3	0.2

ANGLE OF INCIDENCE FORMED BY A RAY FROM LIGHT SOURCE TO THE MARKER AND THE NORMAL TO THE LEADING EDGE OF THE MARKER FACE (ALSO HORIZONTAL ENTRANCE ANGLE).

ANGLE OF OBSERVATION FORMED BY A RAY FROM LIGHT SOURCE TO THE MARKER AND THE RETURNED RAY FROM THE MARKER TO THE MEASURING RECEPTOR.

SPECIFIC INTENSITY IS THE MEAN CANDLEPOWER OF THE REFLECTED LIGHT (AT GIVEN INCIDENCE AND DIVERGENCE ANGLES) FOR EACH FOOT–CANDLE AT THE REFLECTOR (ON A PLANE PERPENDICULAR TO THE INCIDENT LIGHT).

TYPE A UNITS ARE INTENDED TO PROVIDE HIGH VISIBILITY BOTH AT NIGHT AND DURING DAYLIGHT. THEIR DAY TIME VISIBILITY SHALL BE ASSURED BY SIZE, SHAPE AND COLOR AS FOLLOWS:

1) THE UNITS SHALL BE A HIGH VISIBILITY YELLOW OR WHITE COLOR WHICH WILL NOT DEGRADE SUBSTANTIALLY DUE TO TRAFFIC WEAR AND WHICH WILL MATCH THE COLOR OF THE REFLECTOR.

2) WHEN VIEWED FROM ABOVE, THE UNITS SHALL HAVE A VISIBLE AREA OF NOT LESS THAN 14 SQUARE INCHES.

3) WHEN VIEWED FROM THE FRONT, PARALLEL TO THE PAVEMENT, AS FROM APPROACHING TRAFFIC, THE UNIT SHALL HAVE A WIDTH OF APPROXIMATELY 4 INCHES AND A VISIBLE AREA OF NOT LESS THAN 1.5 SQUARE INCHES.

TYPE B UNITS ARE INTENDED TO PROVIDE HIGH VISIBILITY AT NIGHT BY RETRO–REFLECTING AUTOMOTIVE HEADLIGHT BACK TO THE DRIVER.

INSTALLATION: THEY SHALL BE ATTACHED TO CLEAN, DRY PAVEMENT BY A BUTYL ADHESIVE PAD, A BITUMINOUS ADHESIVE OR OTHER CONSTRUCTION GRADE ADHESIVES (SUCH AS FRANKLIN PANEL AND METAL ADHESIVE) SUITABLE TO ANCHOR THE UNIT UNDER THE ABOVE CONDITIONS. WHEN IT IS NECESSARY TO ATTACH UNITS TO NEW CONCRETE WITH CURING COMPOUND REMAINING, THE CURING COMPOUND MEMBRANE SHALL BE REMOVED BY SANDBLASTING OR OTHER MECHANICAL CLEANING METHOD. THEY SHALL BE INSTALLED IN ACCORDANCE WITH THE MANUFACTURER'S RECOMMENDATIONS.

THE CONTRACTOR SHALL IMMEDIATELY REPLACE, AT HIS COST, ANY UNITS WHICH FAIL (BROKEN HOUSING, HOUSING WORN TO THE EXTENT THAT DAYTIME VISIBILITY IS SIGNIFICANTLY DIMINISHED OR OF AN UNACCEPTABLE COLOR, DETACHED OR BROKEN REFLECTOR, HOUSING DETACHED FROM ADHESIVE).

TRPM'S ARE LIKELY TO BE REMOVED BY SNOW PLOWING OPERATIONS, THUS THEY ARE NOT CONSIDERED SUITABLE FOR USE DURING THE PERIOD FROM OCTOBER 15 UNTIL APRIL 30. THE CONTRACTOR IS ADVISED TO SCHEDULE HIS WORK AND/OR THE USE OF THESE DEVICES TO AVOID THIS PERIOD. SHOULD THE CONTRACTOR CHOOSE TO USE TRPM'S DURING THIS PERIOD AND THEY ARE SUBSEQUENTLY REMOVED OR DESTROYED BY SNOW AND ICE CONTROL ACTIVITIES, THE CONTRACTOR SHALL IMMEDIATELY, AT HIS COST, PROVIDE A SUBSTITUTE TRAFFIC GUIDANCE SYSTEM EFFECTIVE DURING LIGHT AND DARK AND WHICH IS ACCEPTABLE TO THE ENGINEER.

THE UNITS SHALL BE PLACED ACCURATELY TO DEPICT STRAIGHT OR UNIFORMLY CURVING LINES. WHEN USED TO SUPPLEMENT TEMPORARY PAVEMENT MARKINGS, THEY MAY BE PLACED ON OR IMMEDIATELY ADJACENT TO THE PAVEMENT MARKING. LOCATIONS SHALL BE ADJUSTED UP TO ONE FOOT LONGITUDINALLY OR SIX INCHES LATERALLY TO AVOID PLACEMENT ON JOINTS, CRACKED OR DETERIORATED PAVEMENT. THEY SHALL NOT BE PLACED DIRECTLY ON PAVEMENT MARKINGS IF THIS WILL DETRACT FROM THEIR ABILITY TO REMAIN ATTACHED TO THE PAVEMENT.

APPLICATION
1) WHEN REQUIRED TO SUPPLEMENT PAVEMENT MARKING; THEY SHALL BE PLACED AS FOLLOWS:

LINE	TYPE	SPACING
EDGE LINE	A OR B	20' C/C
LANE LINE	A OR B	40' C/C*
CENTER LINE (SINGLE/BROKEN)	A OR B	40' C/C *
CENTER LINE (DOUBLE/SOLID)	A OR B	2 UNITS SIDE BY SIDE 4 INCHES APART 20' C/C
CHANNELIZING LINE (INCLUDES EXIT GORE NOSE)	A OR B	10' C/C

* CENTERED IN GAP

2) WHEN USED TO SIMULATE (REPLACE) PAVEMENT MARKING THEY SHALL BE PLACED AS FOLLOWS:

LINE	TYPE	SPACING
EDGE LINE	A	5' C/C
LANE LINE	A	4@3.33' C/C 30' GAP (40' CYCLE)
CENTER LINE (DOUBLE SOLID)	A	2 UNITS SIDE BY SIDE 5' C/C
CENTER LINE (SINGLE BROKEN)	A	4@3.33' C/C 30' GAP (40' CYCLE)
CHANNELIZING LINE (INCLUDES EXIT GORE NOSE)	A	5' C/C
EDGE LINE (TWO COLOR) (WHITE/YELLOW)	A	BACK TO BACK 5' C/C

YELLOW TRPM'S USED TO SEPARATE OPPOSITE FLOWS OF TRAFFIC (CENTER LINES) SHALL INCLUDE REFLECTIONS FOR BOTH DIRECTIONS. ALL OTHER YELLOW TRPM'S AND WHITE TRPM'S SHALL PROVIDE RETROREFLECTIVITY FOR ONE DIRECTION.

REMOVAL
REMOVAL SHALL BE ACCOMPLISHED IN A MANNER THAT LITTLE OR NONE OF THE ADHESIVE REMAINS ON THE PAVEMENT AND PERMANENT PAVEMENT SURFACES SHALL NOT BE SCARRED, BROKEN OR ROUGHENED SIGNIFICANTLY.

PAYMENT
BASIS OF PAYMENT SHALL BE AT THE CONTRACT UNIT PRICE PER EACH TRPM AND SHALL INCLUDE ALL LABOR, EQUIPMENT, HARDWARE AND INCIDENTALS REQUIRED TO PERFORM THE WORK. IT SHALL ALSO INCLUDE REPLACEMENT AT NO ADDITIONAL COST OF ALL TRPM'S WHICH, IN THE JUDGEMENT OF THE ENGINEER, FAIL FOR ANY REASON, EXCEPT DUE TO FAILURE OF THE PAVEMENT TO WHICH THEY ARE ATTACHED.

ITEM	UNIT	DESCRIPTION
614	EACH	TEMPORARY RAISED PAVEMENT MARKERS

(See Sheet 10)

STATIONING (FROM–TO) (SIDE)	SPACING	TYPE A W	TYPE A Y	TYPE A Y/Y		TYPE B W	TYPE B Y	TYPE B Y/Y		REMARKS
57+90 – 66+50	5'	172								CLOSING RT. LANE
59+85 – 66+50	20'		34							CLOSING RT. LANE
57+90 – 66+50	20'	44								CLOSING LT. LANE
57+90 – 66+50	5'		172							CLOSING LT. LANE
57+90 – 58+80	10'			10						CLOSING RT. LANE
58+80 – 59+85	10'		11/11							CLOSING RT. LANE
57+90 – 59+85	10'		21							CLOSING LT. LANE
TOTALS		216	249	10						
		475								

THE FOLLOWING QUANTITY HAS BEEN INCLUDED IN THE GENERAL SUMMARY FOR THE ABOVE PURPOSE.

ITEM 614 TEMPORARY RAISED PAVEMENT MARKERS, TYPE A 475 EACH

STATE OF OHIO
DEPARTMENT OF TRANSPORTATION
DISTRICT FIVE

614 TEMPORARY RAISED PAVEMENT MARKERS

STANDARD NO. D3–2D (D)

DESIGNED	DRAWN Autocad	CHECKED	REVIEWED	DATE	REVISED

L0161431 (A) 1/13/89

ITEM 622 CONCRETE BARRIER TYPE D, AS PER PLAN

CALC. BY	DATE 1-3-89	LIC-37-15.61	OHIO	21/123
CHKD. BY	DATE 1-18-89	LIC-16-14.26	FHWA REGION 5	

SEE STANDARD DRAWING MC-9 FOR ADDITIONAL NOTES AND DETAILS.

THE CONCRETE BARRIER SHALL NOT BE PLACED PRIOR TO THE PLACEMENT OF THE 203 EMBANKMENT ON THE SHOULDERS.

THE COST OF THE PARAPET TRANSITION, CONCRETE INSERT ANCHOR ASSEMBLY AND REINFORCING STEEL AS SHOWN IN GR-3 WILL BE INCLUDED IN THE COST OF THE ITEM 622 – CONCRETE BARRIER TYPE D, AS PER PLAN.

(*) EXPANSION JOINT 3/4" MIN. PERFORMED FILLER 705.03

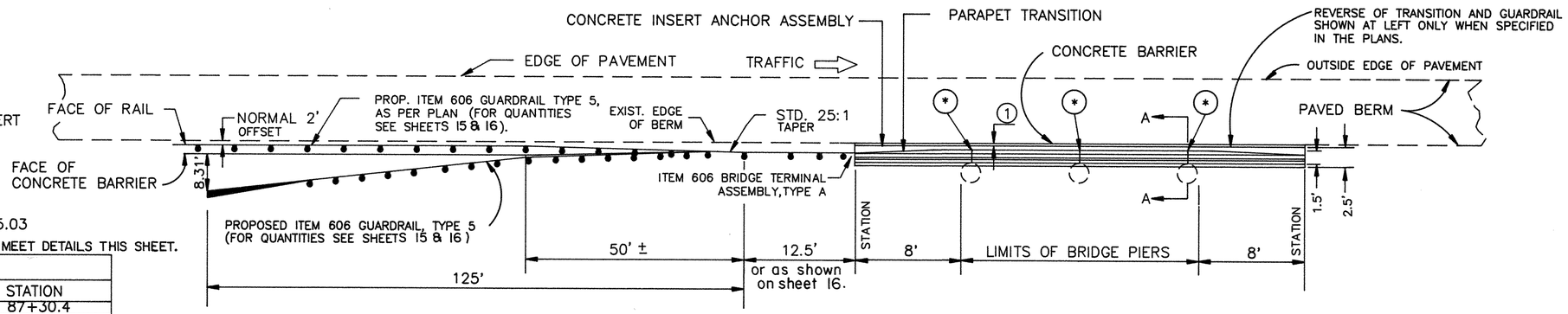

STATIONS TO BE ADJUSTED TO MEET DETAILS THIS SHEET.

LOCATION	(1)		LOCATION STATION	LOCATION STATION
LIC-16-1416 L	2.1'	E.B.	86+79.8	87+30.4
LIC-16-1416 L	0.0	W.B.	87+25.0	87+75.6
LIC-661-0002	2.2'	W.B.	111+22.2	111+72.3

CALCULATIONS (CARRIED TO THE GENERAL SUMMARY)

ITEM 622 CONCRETE BARRIER TYPE D, AS PER PLAN:

	W.B.	E.B.
LIC-16-1416L	50.6 L.F.	50.6 L.F.
LIC-661-0002	50.1 L.F.	
TOTAL	100.7 L.F. +	50.6 L.F. = 151.3 L.F.

ITEM 305 CONCRETE BASE 9":

LIC-16-1416L	50.6' x 2.1' ÷ 9 =	11.8 S.Y.
LIC-661-0002	50.1' x 2.2' ÷ 9 =	12.2 S.Y.
TOTAL		24.0 S.Y.

ITEM 203 EXCAVATION, NOT INCLUDING EMBANKMENT CONSTRUCTION:

LIC-16-1416L	.54' x 2.5' x 50.6' ÷ 27 =	3 C.Y.
LIC-16-1416L	.54' x 4.6' x 50.6' ÷ 27 =	5 C.Y.
LIC-661-0002	.54' x 4.7' x 50.1' ÷ 27 =	5 C.Y.
TOTAL		13 C.Y.

ITEM 203 EMBANKMENT, AS PER PLAN:

LIC-16-1416L	7 S.F. x 50.6' + 188' x 8 S.F. ÷ 27 =	69 C.Y.
LIC-16-1416L	7 S.F. x 50.6' + 138' x 8 S.F. ÷ 27 =	54 C.Y.
LIC-661-0002	7 S.F. x 50.1' + 138' x 8 S.F. ÷ 27 =	54 C.Y.
TOTAL		177 C.Y.

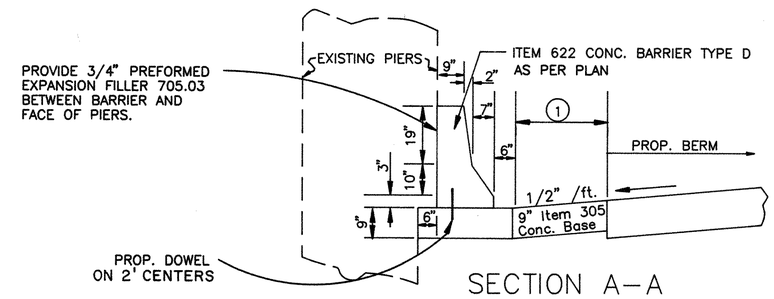

SECTION A–A

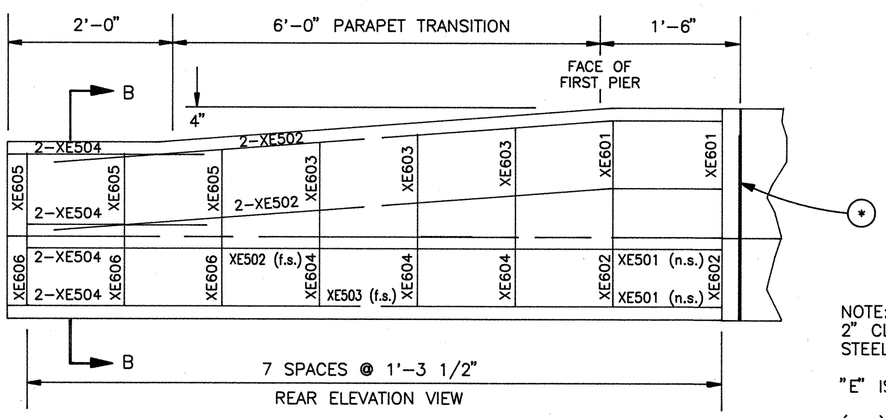

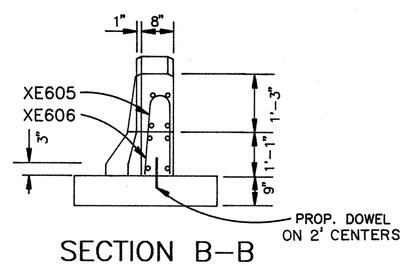

SECTION B–B

NOTE: THERE SHALL BE A MINIMUM 2" CLEARANCE BETWEEN REINFORCING STEEL AND THE SURFACE OF CONCRETE

"E" IS A PREFIX MEANING EPOXY COATED

(n.s.) – NEAR SIDE
(f.s.) – FAR SIDE

STEEL LIST FOR ONE END TREATMENT OF CONCRETE BARRIER BRIDGE PIER PROTECTION

MARK	NO.	LENGTH	WEIGHT	SHAPE
XE601	2	5'-6"	16.5	BENT
XE602	2	2'-2"	6.5	BENT
XE603	3	5'-2"	23.3	BENT
XE604	3	2'-1"	9.4	BENT
XE605	3	4'-10"	21.8	BENT
XE606	3	1'-10"	8.3	BENT
XE501	2	7'-6"	15.6	STR.
XE502	5	7'-10"	40.9	BENT
XE503	1	7'-10"	8.2	BENT
XE504	8	3'-6"	29.2	STR.

BENDING DIAGRAMS

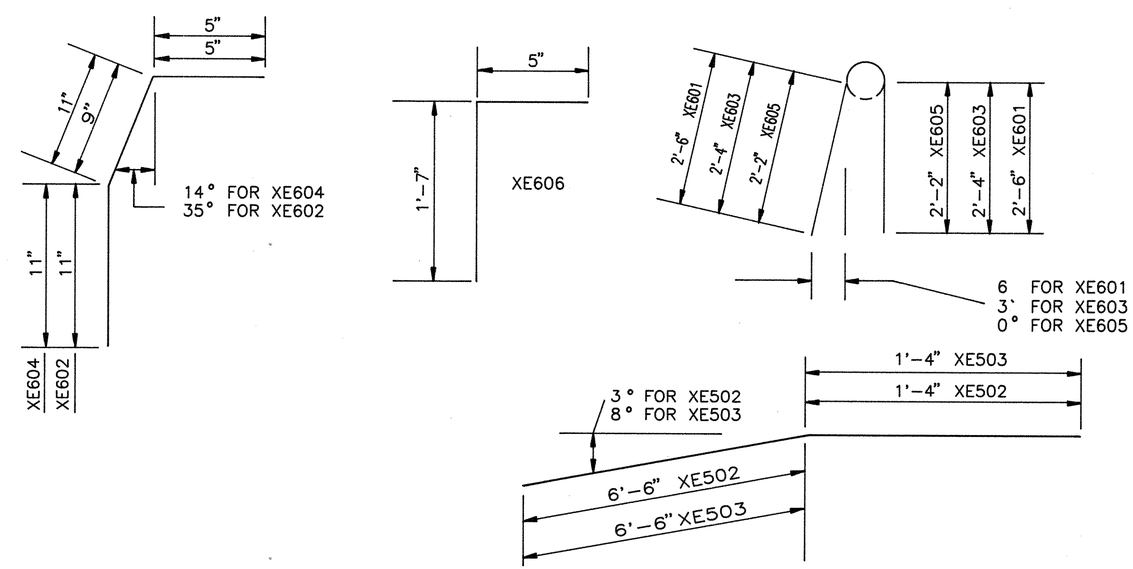

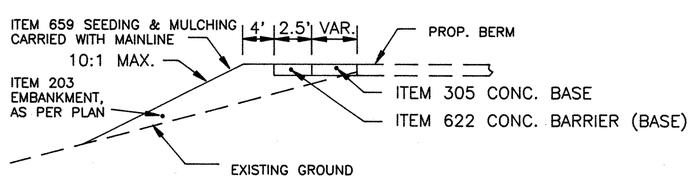

TYPICAL PLACEMENT OF ITEM 203 EMBANKMENT, AS PER PLAN

L0161053 (A) 1/13/89

ITEM 862 RAISED PAVEMENT MARKERS

CALC. BY D.M. DATE 1-3-89
CHKD. BY U.W.C. DATE 1-18-89
LIC - 37 - 15.61
LIC - 16 - 14.26
OHIO
FHWA REGION 5
24
123

ITEM 862 RAISED PAVEMENT MARKERS

THE FOLLOWING ESTIMATED QUANTITY HAS BEEN INCLUDED IN THE GENERAL SUMMARY TO PERFORM THE WORK AS DESCRIBED IN THE SUPPLEMENTAL SPECIFICATION 862.

ITEM 862 RAISED PAVEMENT MARKERS	850	EACH	(STATE & FEDERAL)
ITEM 862 RAISED PAVEMENT MARKERS	116	EACH	(CITY, STATE & FEDERAL)

ONE WAY WHITE

MAIN LINE

STATE & FEDERAL

E.B. & W.B. 19,327.84 L.F. ÷ 80 = 242 x 2 = 484 EACH
(−40 T.R.131 & −40 CHERRY VALLEY RD.)
S.R.16 E.B. 380' ÷ 20 = 19 + 2 = 21 EACH
S.R.16 E.B. 238' ÷ 40 = 6 + 7 = 13 EACH
S.R.37 E.B. 350' ÷ 20 = 18 + 2 = 20 EACH
S.R.37 E.B. 288' ÷ 40 = 8 + 8 + 2 = 18 EACH
T.R.131 E.B. (RT.) 119 ÷ 20 = 6 EACH
T.R.131 E.B. (LT.) 120 ÷ 20 = 6 EACH
CHERRY VALLEY RD. (RT.) E.B. 493' ÷ 20 = 25 EACH
CHERRY VALLEY RD. (LT.) E.B. 143' ÷ 20 = 8 EACH
S.R.16 W.B. 123' ÷ 40 = 3 + 4 = 7 EACH
S.R.16 W.B. 350' ÷ 20 = 18 + 2 = 20 EACH
S.R.37 W.B. 181' ÷ 40 = 5 + 6 = 11 EACH
S.R.37 W.B. 420' ÷ 20 = 21 + 2 = 23 EACH
T.R.131 W.B. 100' ÷ 20 = 5 EACH
CHERRY VALLEY RD. (RT.) W.B. 362' ÷ 20 = 18 EACH

SUB−TOTAL 685 EACH

CITY, STATE & FEDERAL

W.B. 2834.84 L.F. ÷ 80 = 35 EACH
E.B. 2611.84 L.F. ÷ 80 = 33 EACH
LINE A E.B. 180' ÷ 20 = 9 + 2 + 10 = 21 EACH
LINE B W.B. 350' ÷ 20 = 18 + 2 = 20 EACH

SUB−TOTAL 109 EACH

ONE WAY YELLOW

STATE & FEDERAL

S.R.16 E.B.	2 EACH
S.R.16 E.B.	2 EACH
S.R.37 E.B.	2 EACH
S.R.37 E.B.	2 EACH
S.R.16 W.B.	2 EACH
S.R.16 W.B.	2 EACH
S.R.37 W.B.	2 EACH
S.R.37 W.B.	2 EACH
SUB−TOTAL	16 EACH

CITY, STATE & FEDERAL

LINE B W.B. 2 EACH

SUB−TOTAL 2 EACH

TWO−WAY WHITE & RED

STATE & FEDERAL

S.R.16 E.B.	20 EACH
S.R.37 E.B.	9 EACH
T.R.131 E.B.	20 EACH
CHERRY VALLEY RD. E.B.	20 EACH
S.R.16 W.B.	20 EACH
S.R.37 W.B.	20 EACH
T.R.131 W.B.	20 EACH
CHERRY VALLEY RD. W.B.	20 EACH
SUB−TOTAL	149 EACH

CITY, STATE & FEDERAL

LINE B W.B. 5 EACH

SUB−TOTAL 5 EACH

GENERAL SUMMARY

CALC. BY DWW DATE 6-6-97
CHKD. BY LWC DATE 6-6-97

LIC-37- 15.61
LIC-16- 14.26

OHIO
FHWA REGION 5

ITEM	STATE AND FEDERAL SHEET NUMBER 6	7	15	16	17	21	28	59	60	61	64	8	91	CITY, STATE AND FEDERAL SHEET NUMBER 7	15	16	17	61		8	6	91	PARTICIPATION STATE & FEDERAL SUB-TOTAL	CITY, STATE & FEDERAL SUB-TOTAL	ITEM	ITEM EXT.	GRAND TOTAL	UNIT	DESCRIPTION
																													ROADWAY
201		LUMP												LUMP									LUMP	LUMP	201		LUMP		CLEARING AND GRUBBING, AS PER PLAN (See Sheet 7)
202													184									54	184	54	202		238	SQ.YD.	PORTIONS OF APPROACH SLAB REMOVED
202	590																						590		202		590	EACH	RAISED PAVEMENT MARKERS REMOVED FOR STORAGE
202			9,152.84	11,574.34	8,025.0										2452.16	2247.16	1509.5						28,752.18	6208.82	202		34,961.0	LIN.FT.	GUARDRAIL REMOVED
202											503												503		202		503	LIN.FT.	CONDUIT REMOVED
202							1677																1677		202		1677	LIN.FT.	CURB REMOVED
202							214																214		202		214	SQ.YD.	CONCRETE MEDIAN REMOVED
202											5												5		202		5	EACH	PULL BOX REMOVED
202										534								134					534	134	202		668	SQ.YD.	WEARING COURSE REMOVED
202									9883	7266								571					17,149	571	202		17,720	SQ.YD.	PAVEMENT REMOVED
203								1597	16,462	10,506								864					28,565	864	203		29,429	SQ.YD.	SUBGRADE COMPACTION
203	2650																						2650		203		2650	CU.YD.	EMBANKMENT, USING GRANULAR MATERIAL
203	5400					177		389	718												950		6684	950	203		7,634	CU.YD.	EMBANKMENT, AS PER PLAN (See Sheet 6)
203	2650					13		1720	5,706	2379								200					12,468	200	203		12,668	CU.YD.	EXCAVATION NOT INCLUDING EMBANKMENT CONSTRUCTION
606			8577.84	9,161.84	2,737.5										2064.66	2072.16	1347.0						20,477.18	5483.82	606		25,961	LIN.FT.	GUARDRAIL, TYPE 5, AS PER PLAN (See Sheet 8)
606			112.5	1850	4225										200.0	100.0							6,187.5	300.0	606		6487.5	LIN.FT.	GUARDRAIL, TYPE 5
606			16	8	4										18	4	4						28	26	606		54	EACH	GUARDRAIL POSTS INSTALLED
606			6	6	15										5	2							27	7	606		34	EACH	ANCHOR ASSEMBLY, TYPE A
606					4																		4		606		4	EACH	ANCHOR ASSEMBLY, BARRIER DESIGN, TYPE A
606			5	6	8											2	3						19	5	606		24	EACH	BRIDGE TERMINAL ASSEMBLY, TYPE A
606					4																		4		606		4	EACH	BRIDGE TERMINAL ASSEMBLY, TYPE F, AS PER PLAN (See Sheet 8)
606					100												150						100	150	606		250	LIN.FT.	GUARDRAIL, BARRIER DESIGN, TYPE 5
606			5	4	11										4	2	1						20	7	606		27	EACH	ANCHOR ASSEMBLY, TYPE T
																													EROSION CONTROL
207		250												50									250	50	207		300	EACH	STRAW OR HAY BALES
207		33,000												5,300									33,000	5300	207		38,300	SQ.YD.	TEMPORARY SEEDING AND MULCHING
659		235												41									235	41	659		276	M.GAL.	WATER
659		371												60									371	60	659		431	M.SQ.FT.	MOWING
659		150,300						4494	10,043					26,300									164,837	26,300	659		191,137	SQ.YD.	SEEDING AND MULCHING
659		21.89												3.5									21.89	3.5	659		25.39	TON	COMMERCIAL FERTILIZER
659		74.18												11.84									74.18	11.84	659		86.02	TON	AGRICULTURAL LIMING

L0161406

GENERAL SUMMARY

ITEM	STATE AND FEDERAL SHEET NUMBER 6	7	8	15	16	17	21	28	59	60	61	73	87	91	CITY, STATE AND FEDERAL SHEET NUMBER 6	7	8	15	16	17	61		73	91	PARTICIPATION STATE & FEDERAL SUB-TOTAL	CITY, STATE & FEDERAL SUB-TOTAL	ITEM	ITEM EXT.	GRAND TOTAL	UNIT	DESCRIPTION
																															DRAINAGE
603			50									132					10						15		182	25	603		207	LIN.FT.	6" CONDUIT, TYPE F, 707.15
603												2540											401		2540	401	603		2941	LIN.FT.	6" CONDUIT, TYPE F, 707.17 NON-PERFORATED, ASTM 3034 SDR 35 OR S.S.931
603												16													16		603		16	LIN.FT.	6" CONDUIT, TYPE B, 707.17 NON-PERFORATED, ASTM 3034 SDR 35 OR S.S.931
603												13													13		603		13	LIN.FT.	12" CONDUIT, TYPE C, 706.02
603												279													279		603		279	LIN.FT.	15" CONDUIT, TYPE C
603												7													7		603		7	LIN.FT.	24" CONDUIT, TYPE B
604												1													1		604		1	EACH	CATCH BASIN, NO.5, AS PER PLAN (See Sheet 75)
604												3											3		3	3	604		6	EACH	CATCH BASIN, NO.8, AS PER PLAN (See Sheet 75)
604												1													1		604		1	EACH	MANHOLE, NO.1
604												1													1		604		1	EACH	MANHOLE, NO.3 WITH HEAVY DUTY FRAME AND COVER
604												10											2		10	2	604		12	EACH	CATCH BASIN RECONSTRUCTED TO GRADE, AS PER PLAN (See Sheet 75)
604												16											1		16	1	604		17	EACH	CATCH BASIN RECONSTRUCTED TO GRADE AS NO.8, AS PER PLAN (See Sheet 75)
604												3													3		604		3	EACH	MANHOLE ADJUSTED TO GRADE WITH HEAVY DUTY FRAME AND COVER
604												1													1		604		1	EACH	INLET NO. 2-6
605												210													210		605		210	LIN.FT.	AGGREGATE DRAINS
605												71,413											10,450		71,413	10,450	605		81,863	LIN.FT.	SHALLOW UNDERDRAINS, AS PER PLAN (See Sheet 74)
605												1684													1684		605		1684	LIN.FT.	6" SHALLOW PIPE UNDERDRAINS, AS PER PLAN (See Sheet 8)
605												9565											228		9565	228	605		9793	LIN.FT.	6" UNCLASSIFIED PIPE UNDERDRAINS, AS PER PLAN (See Sheet 8)
605												68											50		68	50	605		118	LIN.FT.	6" UNCLASSIFIED PIPE UNDERDRAINS, 707.17, AS PER PLAN (See Sheet 8)
604												1													1		604		1	EACH	INLET NO. 2-8
605												495													495		605		495	LIN.FT.	SHALLOW UNDERDRAINS, AS PER PLAN, USING MONSANTO HYDRAWAY
605												495													495		605		495	LIN.FT.	SHALLOW UNDERDRAINS, AS PER PLAN, USING CONTECH STRIPDRAIN 100
605												495													495		605		495	LIN.FT.	SHALLOW UNDERDRAINS, AS PER PLAN, USING ADS ADVANEDGE
605												495													495		605		495	LIN.FT.	SHALLOW UNDERDRAINS, AS PER PLAN, USING 4" PIPE UNDERDRAINS
SPECIAL												12													12		SPECIAL		12	EACH	OBSERVATION RISER (See Sheet 5-A)
SPECIAL												1980													1980		SPECIAL		1980	LIN.FT.	SAWING (See Sheet 5-A)
SPECIAL												58											13		58	13	SPECIAL		71	EACH	PRECAST REINFORCED CONCRETE OUTLET (See Sheet 74)
																															PAVEMENT
254									420		159,220										28763				159,640	28,763	254		188,403	SQ.YD.	PAVEMENT PLANING, BITUMINOUS
301									388		18,899		3								3265				19,290	3265	301		22,555	CU.YD.	BITUMINOUS AGGREGATE BASE, AC-20
304										2801	1752										165				4553	165	304		4718	CU.YD.	AGGREGATE BASE
305						24																			24		305		24	SQ.YD.	9" CONCRETE BASE
404				318	340	102												77	77	50					760	204	404		964	CU.YD.	ASPHALT CONCRETE, AC-20 UNDER GUARD RAIL
407	17,000								90		16,036				3,000						3147				33,126	6147	407		39,273	GAL.	TACK COAT
408											4202										346				4202	346	408		4548	GAL.	BITUMINOUS PRIME COAT
408				2288	2444	731												551	553	360					5463	1464	408		6927	GAL.	BITUMINOUS PRIME COAT, AS PER PLAN (See Sheet 8)
452										3702															3702		452		3702	SQ.YD.	12" PLAIN CONCRETE PAVEMENT, AS PER PLAN (See Sheet 7)
452										12,760															12,760		452		12,760	SQ.YD.	15" PLAIN CONCRETE PAVEMENT, AS PER PLAN (See Sheet 7)
609								200																	200		609		200	LIN.FT.	CURB, TYPE 6
609								1477																	1477		609		1477	LIN.FT.	CURB, TYPE 2-B AS PER PLAN (SEE SHEET 3)
611														182										54	182	54	611		236	SQ.YD.	REINFORCED CONCRETE APPROACH SLAB (T=15"), AS PER PLAN
612								214																	214		612		214	SQ.YD.	CONCRETE MEDIAN
617		43														9									43	9	617		52	M.GAL.	WATER
617									11	380	3907										618				4298	618	617		4916	CU.YD.	COMPACTED AGGREGATE, TYPE A
622							152																		152		622		152	LIN.FT.	CONCRETE BARRIER TYPE D, AS PER PLAN (See Sheet 21)
446									95		5945										1144				6040	1144	446		7184	CU.YD.	ASPHALT CONCRETE SURFACE COURSE, TYPE 1, AC-20
SPECIAL									356		106224										18932				106580	18932	SPECIAL		125,512	SQ.YD.	CRACKING AND SEATING EXISTING 451 RIGID PAVEMENT (SEE PROPOSAL NOTE)

See Sht. 5-A

GENERAL SUMMARY

CALC. BY	CHKD. BY	DATE			OHIO	FHWA REGION	27/123
			LIC-37-15.61	LIC-16-14.26	OHIO	5	27/123

ITEM	STATE AND FEDERAL SHEET NUMBER 6	7	8	9	91	19	20	20A	24	64	69	71	72	CITY, STATE AND FEDERAL SHEET NUMBER 6	7	8	9	19	20	24	71	72		91	PARTICIPATION STATE & FEDERAL SUB-TOTAL	CITY, STATE & FEDERAL SUB-TOTAL	ITEM	ITEM EXT.	GRAND TOTAL	UNIT	DESCRIPTION
																															TRAFFIC CONTROL
620						91												13							91	13	620		104	EACH	DELINEATOR, TYPE C, DESIGN 2, FLEXIBLE POST MOUNTED
620						85												14							85	14	620		99	EACH	DELINEATOR, TYPE C, DESIGN 4, FLEXIBLE POST MOUNTED
620						54												10							54	10	620		64	EACH	DELINEATOR, TYPE D, DESIGN 2, FLEXIBLE POST MOUNTED
620						10												2							10	2	620		12	EACH	DELINEATOR, TYPE D, DESIGN 4, FLEXIBLE POST MOUNTED
620						165												22							165	22	620		187	EACH	DELINEATOR REMOVED FOR STORAGE
621												14.98									2.11				14.98	2.11	621		17.09	MILE	LANE LINE
621												0.28									0.18				0.28	0.18	621		0.46	MILE	CENTER LINE
621												32.73									5.22				32.73	5.22	621		37.95	MILE	EDGE LINE
621												1677													1677		621		1677	LIN.FT.	CURB MARKING
621												1932													1932		621		1932	SQ.FT.	ISLAND MARKING
625										6															6		625		6	EACH	PULL BOX, METAL, 713.09, 18"
625										282															282		625		282	LIN.FT.	CONDUIT, 713.04, 3"
625										508															508		625		508	LIN.FT.	TRENCH
625										226															226		625		226	LIN.FT.	CONDUIT, 713.04, 1 1/2"
630											522														522		630		522	SQ.FT.	SIGNS, FLAT SHEET TYPE G
630											490														490		630		490	SQ.FT.	SIGNS, EXTRUSHEET TYPE G
630											96														96		630		96	LIN.FT.	GROUND MOUNTED SUPPORTS, NO.2 POST
630											696														696		630		696	LIN.FT.	GROUND MOUNTED SUPPORTS, NO.3 POST
630											345														345		630		345	LIN.FT.	GROUND MOUNTED SUPPORTS, NO.4 POST
630											35														35		630		35	LIN.FT.	GROUND MOUNTED SUPPORTS, W 10 X 12 BEAM
630											49														49		630		49	LIN.FT.	GROUND MOUNTED SUPPORTS, W 10 X 22 BEAM
630											5														5		630		5	CU.YD.	CONCRETE FOR EMBEDDED FOUNDATION
630											4														4		630		4	EACH	BREAKAWAY BEAM CONNECTION
630											34														34		630		34	EACH	REMOVAL OF GROUND MOUNTED SIGN AND DISPOSAL
630											1														1		630		1	EACH	REMOVAL OF GROUND MOUNTED MAJOR SIGN AND DISPOSAL
630											46														46		630		46	EACH	REMOVAL OF GROUND MOUNTED POST SUPPORT AND DISPOSAL
630											2														2		630		2	EACH	REMOVAL OF GROUND MOUNTED BEAM SUPPORT AND DISPOSAL
630											4														4		630		4	EACH	REMOVAL OF GROUND MOUNTED SIGN AND STORAGE
630											2														2		630		2	EACH	REMOVAL OF OVERHEAD MOUNTED SIGN AND DISPOSAL
630											2														2		630		2	EACH	OVERPASS STRUCTURE MOUNTED SIGN SUPPORT, TYPE TC-18.26, DESIGN 3
630											2														2		630		2	EACH	REMOVAL OF OVERHEAD SIGN SUPPORT AND DISPOSAL, TYPE TC-18.26
630											6														6		630		6	EACH	REMOVAL OF LUMINAIRE SUPPORT ASSEMBLY AND DISPOSAL
632										1110															1110		632		1110	LIN.FT.	SIGNAL CABLE, 6-CONDUCTOR NO.14
632										188															188		632		188	LIN.FT.	LOOP DETECTOR LEAD-IN CABLE
632										1850															1850		632		1850	LIN.FT.	LOOP DETECTOR WIRE, TYPE E
632										578															578		632		578	LIN.FT.	LOOP DETECTOR PAVEMENT CUTTING
802			354													101									354	101	802		455	EACH	BARRIER REFLECTOR, TYPE A
802			23													4									23	4	802		27	EACH	BARRIER REFLECTOR, TYPE B
847												434									75				434	75	847		509	LIN.FT.	STOP LINE 947.02
847												9													9		847		9	EACH	WORD ON PAVEMENT, 96 INCHES, 947.02
847												15													15		847		15	EACH	LANE ARROW 947.02
847												597									125				597	125	847		722	LIN.FT.	TRANSVERSE LINES 947.02
847												3981									530				3981	530	847		4511	LIN.FT.	CHANNELIZING LINES 947.02
862									850											116					850	116	862		966	EACH	RAISED PAVEMENT MARKERS
																															MAINTAINING TRAFFIC
404	300													50											300	50	404		350	CU.YD.	BITUMINOUS CONCRETE FOR MAINTAINING TRAFFIC
Special			100													10									100	10	Special		110	EACH	REPLACEMENT DRUMS (See Sheet 8)
614							213												69						213	69	614		282	EACH	BARRIER REFLECTORS, TYPE A
614							476												49						476	49	614		525	EACH	BARRIER REFLECTORS, TYPE B
614								475																	475		614		475	EACH	TEMPORARY RAISED PAVEMENT MARKERS, TYPE A
614													48.1									7.7			48.1	7.7	614		55.8	MILE	TEMPORARY EDGE LINE, CLASS I
616			20													5									20	5	616		25	TON	CALCIUM CHLORIDE
614													0.5									0.4			0.5	0.4	614		0.9	MILE	TEMPORARY CENTER LINE, CLASS II
614													14.7									2.2			14.7	2.2	614		16.9	MILE	TEMPORARY LANE LINE, CLASS II
616			100													20									100	20	616		120	M.GAL.	WATER
614													1582												1582		614		1582	LIN.FT.	TEMPORARY CHANNELIZING LINE, CLASS I
614													3000									1040			3000	1040	614		4040	LIN.FT.	TEMPORARY GORE MARKING, CLASS II
614													458									63			458	63	614		521	LIN.FT.	TEMPORARY STOP LINE, CLASS I
622		20,800													1700										20,800	1700	622		22,500	LIN.FT.	TEMPORARY CONCRETE BARRIER
622					1440																			380	1440	380	622		1820	LIN.FT.	TEMPORARY CONCRETE BARRIER, BRIDGE MOUNTED
																															FOR STRUCTURE 20' AND OVER GENERAL SUMMARY, SEE SHEET 92
SPECIAL	200																								200		SPECIAL		200	HOURS	LAW ENFORCEMENT OFFICER WITH PATROL CAR (See Sheet 6)
614				LUMP													LUMP								LUMP	LUMP	614		LUMP		MAINTAINING TRAFFIC
619	LUMP																								LUMP		619		LUMP		FIELD OFFICE
623																									LUMP	LUMP	623		LUMP		CONSTRUCTION LAYOUT STAKES
624																									LUMP	LUMP	624		LUMP		MOBILIZATION

FHWA REGION	STATE	PROJECT	
5	OHIO		

CALC. BY Q.M.
DATE 1-3-89
CHECK. BY J.W.C.
DATE 1-18-89

LIC-37-15.61
LIC-16-14.26

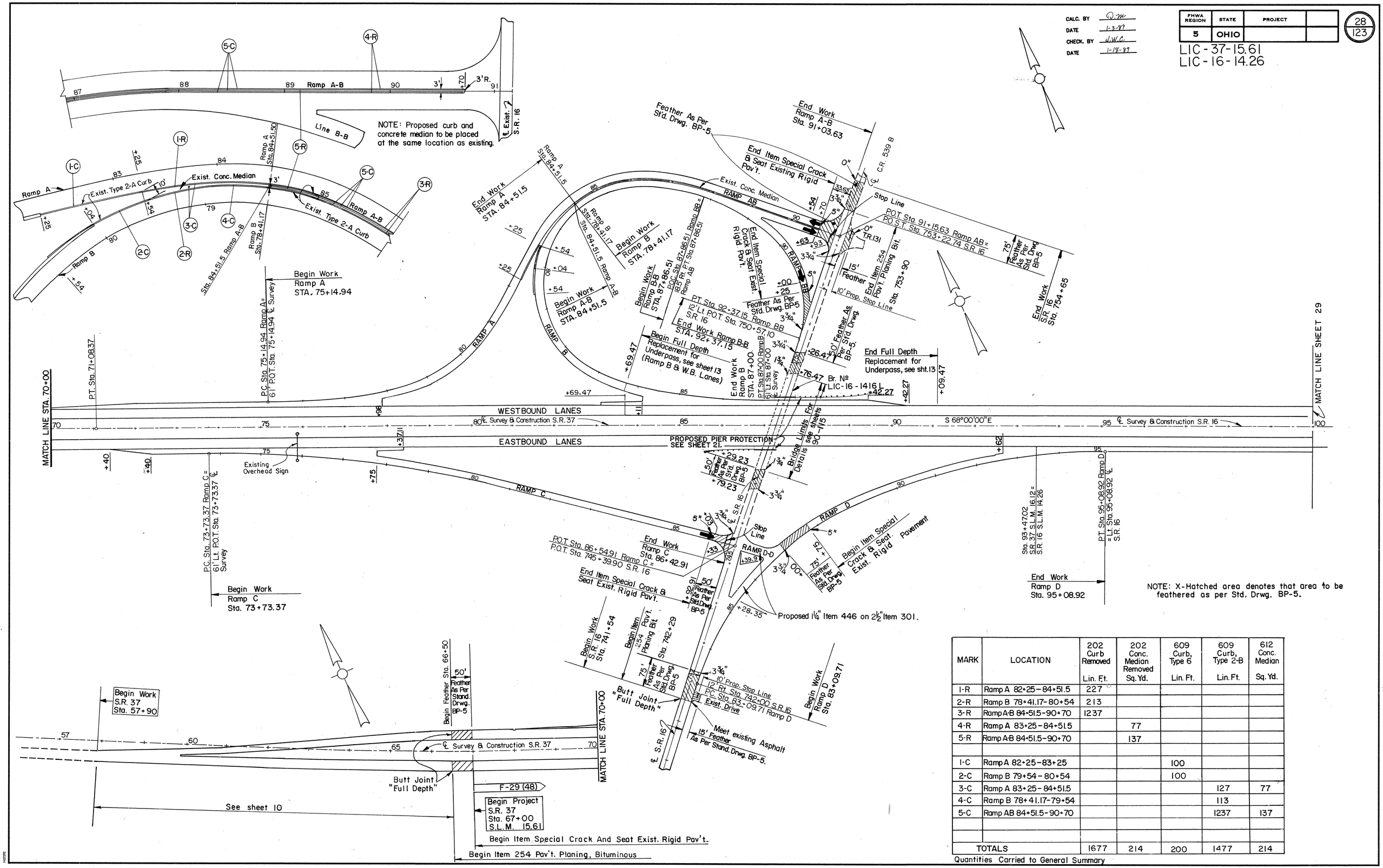

MARK	LOCATION	202 Curb Removed Lin. Ft.	202 Conc. Median Removed Sq. Yd.	609 Curb, Type 6 Lin. Ft.	609 Curb, Type 2-B Lin. Ft.	612 Conc. Median Sq. Yd.
1-R	Ramp A 82+25-84+51.5	227				
2-R	Ramp B 78+41.17-80+54	213				
3-R	Ramp A-B 84+51.5-90+70	1237				
4-R	Ramp A 83+25-84+51.5		77			
5-R	Ramp A-B 84+51.5-90+70		137			
1-C	Ramp A 82+25-83+25			100		
2-C	Ramp B 79+54-80+54			100		
3-C	Ramp A 83+25-84+51.5				127	77
4-C	Ramp B 78+41.17-79+54				113	
5-C	Ramp AB 84+51.5-90+70				1237	137
TOTALS		1677	214	200	1477	214

Quantities Carried to General Summary

S.R. 37 & S.R. 16 INTERCHANGE

CALC. BY O.M.
DATE 1-3-89
CHECK. BY J.W.C.
DATE 1-18-89

FHWA REGION	STATE	PROJECT	
5	OHIO		

LIC-37-15.61
LIC-16-14.26

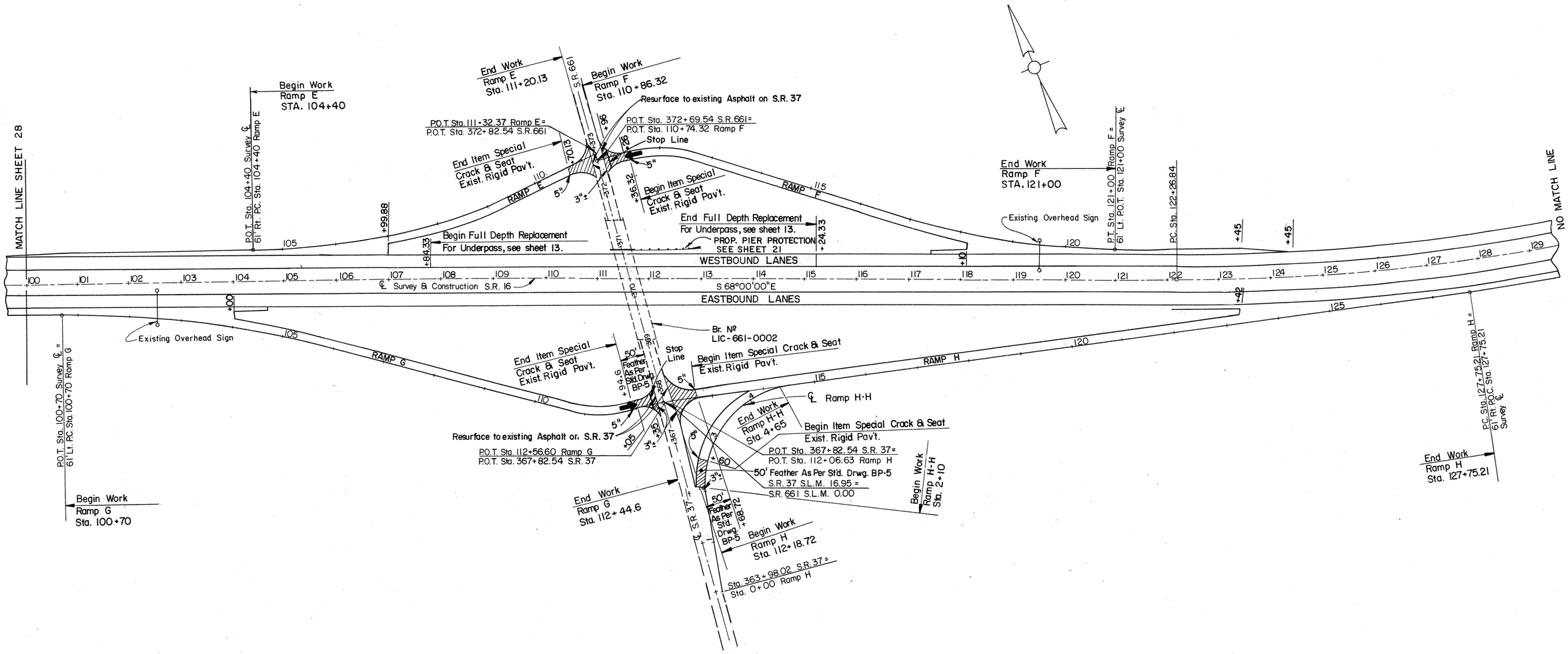

NOTE: X-Hatched area denotes that area to be feathered as per Std. Drwg. BP-5.

S.R. 37 S.R. 661 & S.R. 16 INTERCHANGE

CALC. BY	D.M.
DATE	1-3-89
CHECK. BY	J.W.C.
DATE	1-18-89

LIC-37-15.61
LIC-16-14.26

FED. RD. DIVISION	STATE	PROJECT	
5	OHIO		

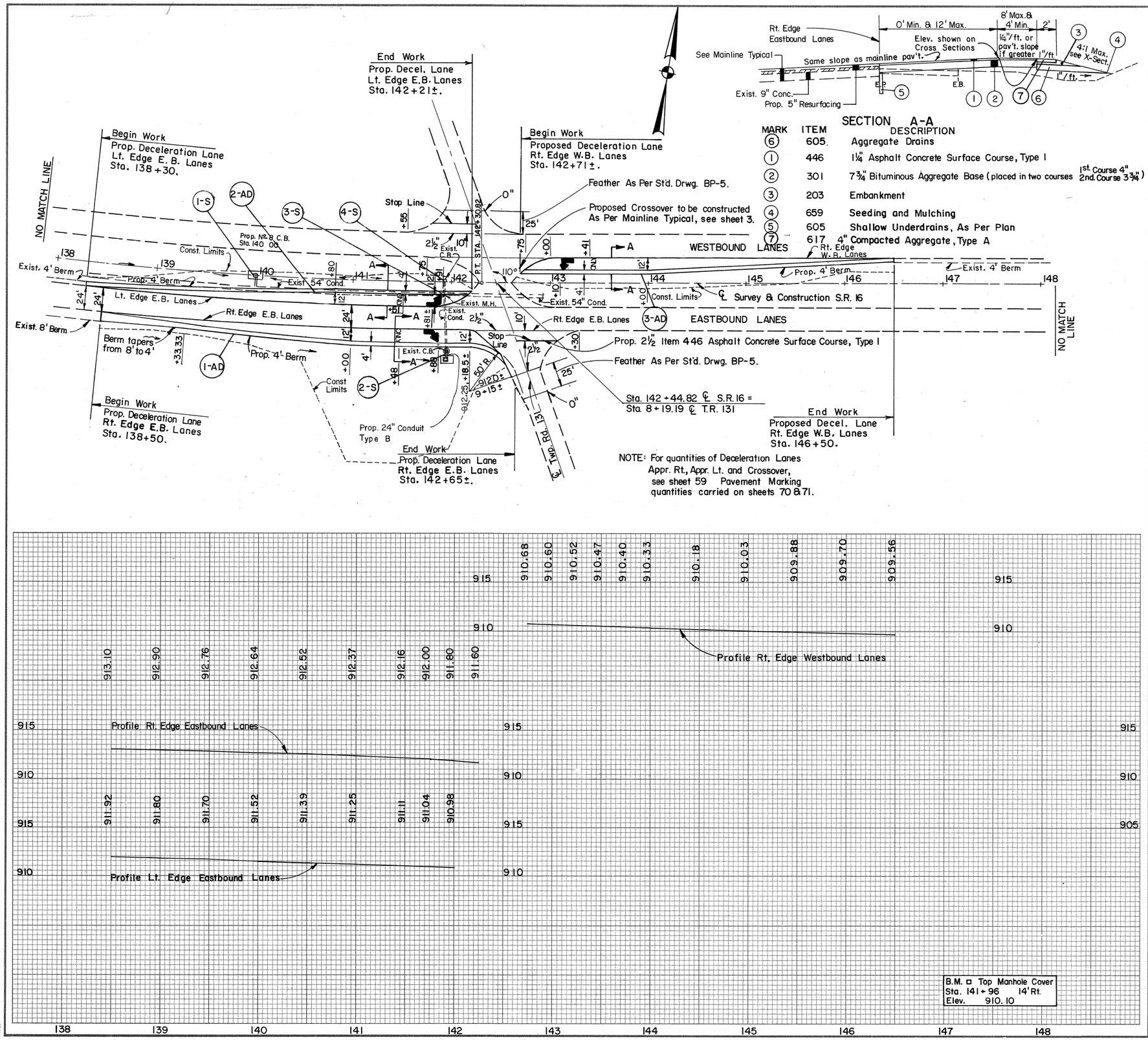

SECTION A-A

MARK	ITEM	DESCRIPTION
6	605	Aggregate Drains
1	446	1¼" Asphalt Concrete Surface Course, Type I
2	301	7¾" Bituminous Aggregate Base (placed in two courses 1st. Course 4" 2nd. Course 3¾")
3	203	Embankment
4	659	Seeding and Mulching
5	605	Shallow Underdrains, As Per Plan
7	617	4" Compacted Aggregate, Type A

NOTE: For quantities of Deceleration Lanes Appr. Rt., Appr. Lt. and Crossover, see sheet 59 Pavement Marking quantities carried on sheets 70 & 71.

ESTIMATED QUANTITIES

★ With Heavy Duty Frame & Cover

⊕ Spaced at 50' Intervals

REF. NO.	STATION TO STATION	SIDE	603 12" Cond. Type C 706.02 Lin. Ft.	603 24" Cond. Type B Lin. Ft.	604 №5 Catch Basin Each	604 №8 Catch Basin Each	604 Manhole Adjusted to Grade★ Each	604 Catch Basin Reconst. to Grade Each	604 №1 Manhole Each	605 Aggr. Drains ⊕ Lin. Ft.	SEE SHEET NO.
1-S	140+00	RT.	13			1			(1)		
2-S	141+95.5	RT.		7	1						
3-S	141+93.8	RT.					1				
4-S	141+92	LT.						1			
1-AD	139+50 - 142+00	Outside Rt.									
2-AD	139+00 - 142+00	Inside Rt.									
3-AD	143+00 - 146+00	Inside Lt.									
TOTALS	(Quantities carried to sheet 73.)		13	7	1	1	1	1	1	210	

T.R. 131 STA. 138+00 — STA. 148+00

FHWA REGION	STATE	PROJECT	
5	OHIO		

31/123

CALC. BY D.W.
DATE 1-3-84
CHECK. BY J.W.C.
DATE 1-18-84

LIC-37-15.61
LIC-16-14.26

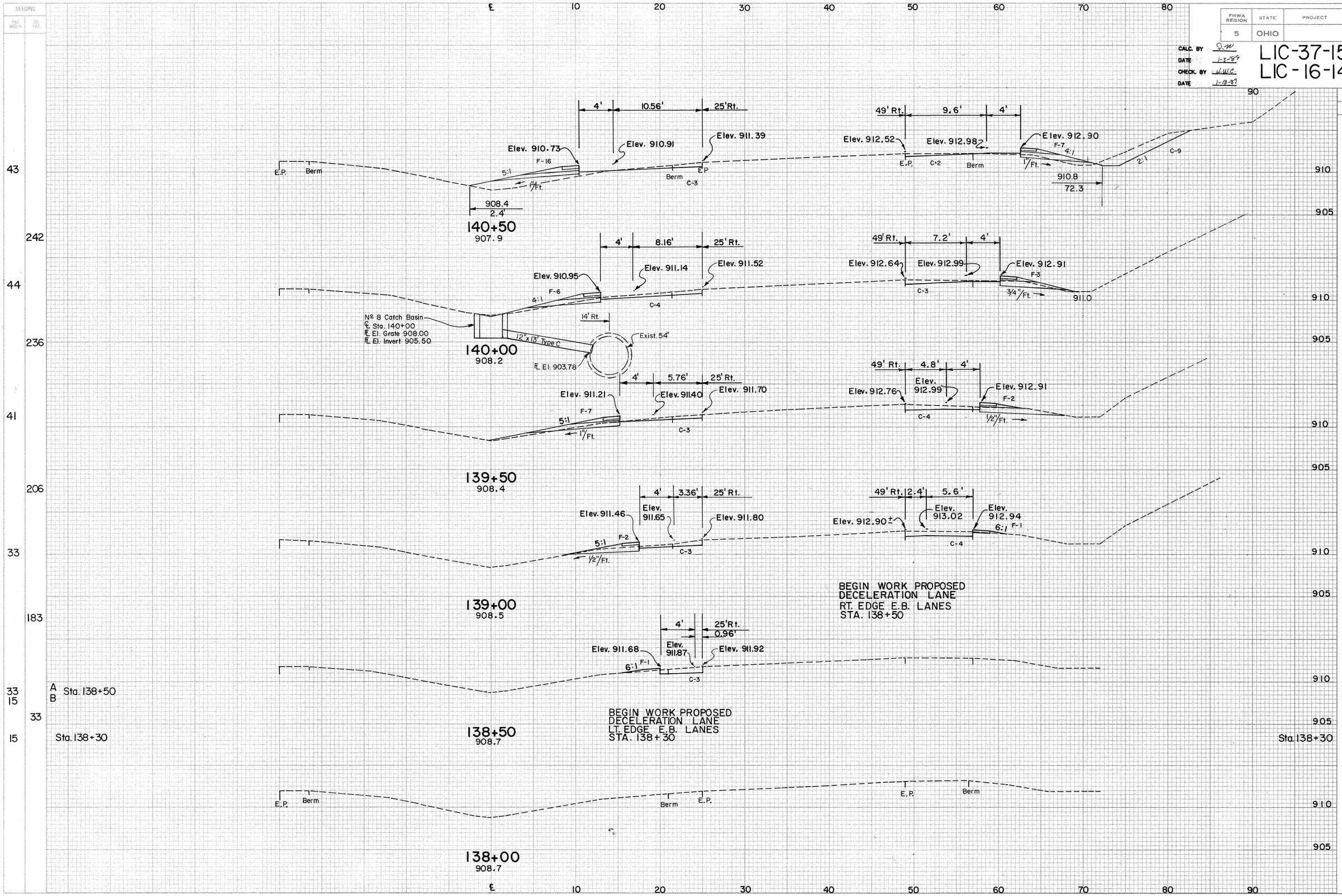

END AREA CUT	END AREA FILL	VOLUME CUT	VOLUME FILL
14	23		
7	9	19	30
7	9	13	17
7	3	13	11
3	1	9	4
0	0	1	1

138+00 - 140+50

FHWA REGION	STATE	PROJECT	
5	OHIO		

32/123

CALC. BY D.M.
DATE 1-3-89
CHECK. BY J.W.C.
DATE 1-18-89

LIC-37-15.61
LIC-16-14.26

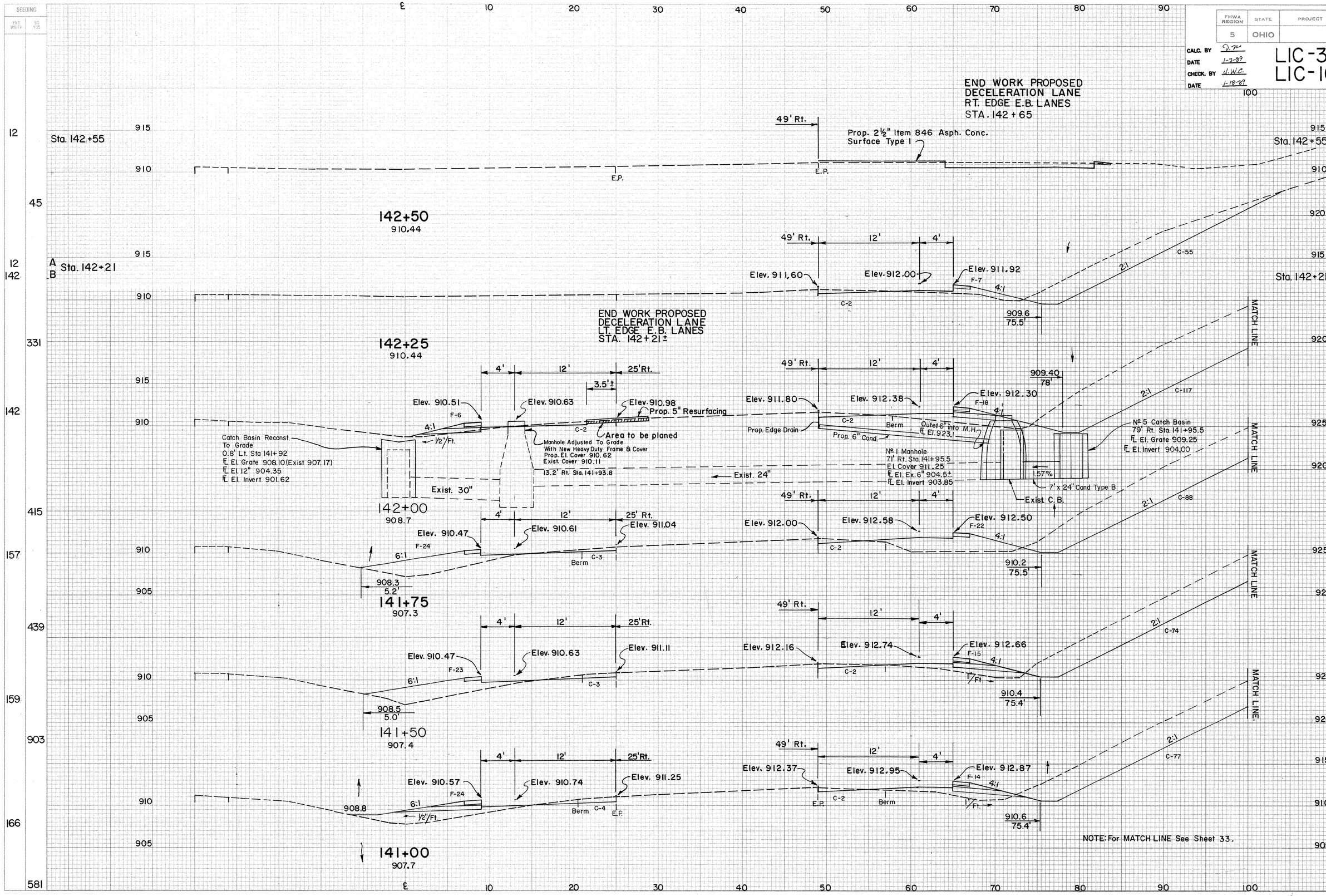

	END AREA CUT	END AREA FILL	VOLUME CUT	VOLUME FILL
Sta. 142+55	0	0		
			36	4
Sta. 142+21	57	7		
			169	12
	377	24		
			331	32
	337	46		
			297	39
	305	38		
			523	70
	260	38		
			254	56

141+00 - 142+50

FHWA REGION	STATE	PROJECT	
5	OHIO		

33/123

CALC. BY D.M.
DATE 1-3-89
CHECK. BY J.W.C.
DATE 1-18-89

LIC-37-15.61
LIC-16-14.26

SEEDING	
END WIDTH	SQ. YDS.

END AREA		VOLUME	
CUT	FILL	CUT	FILL

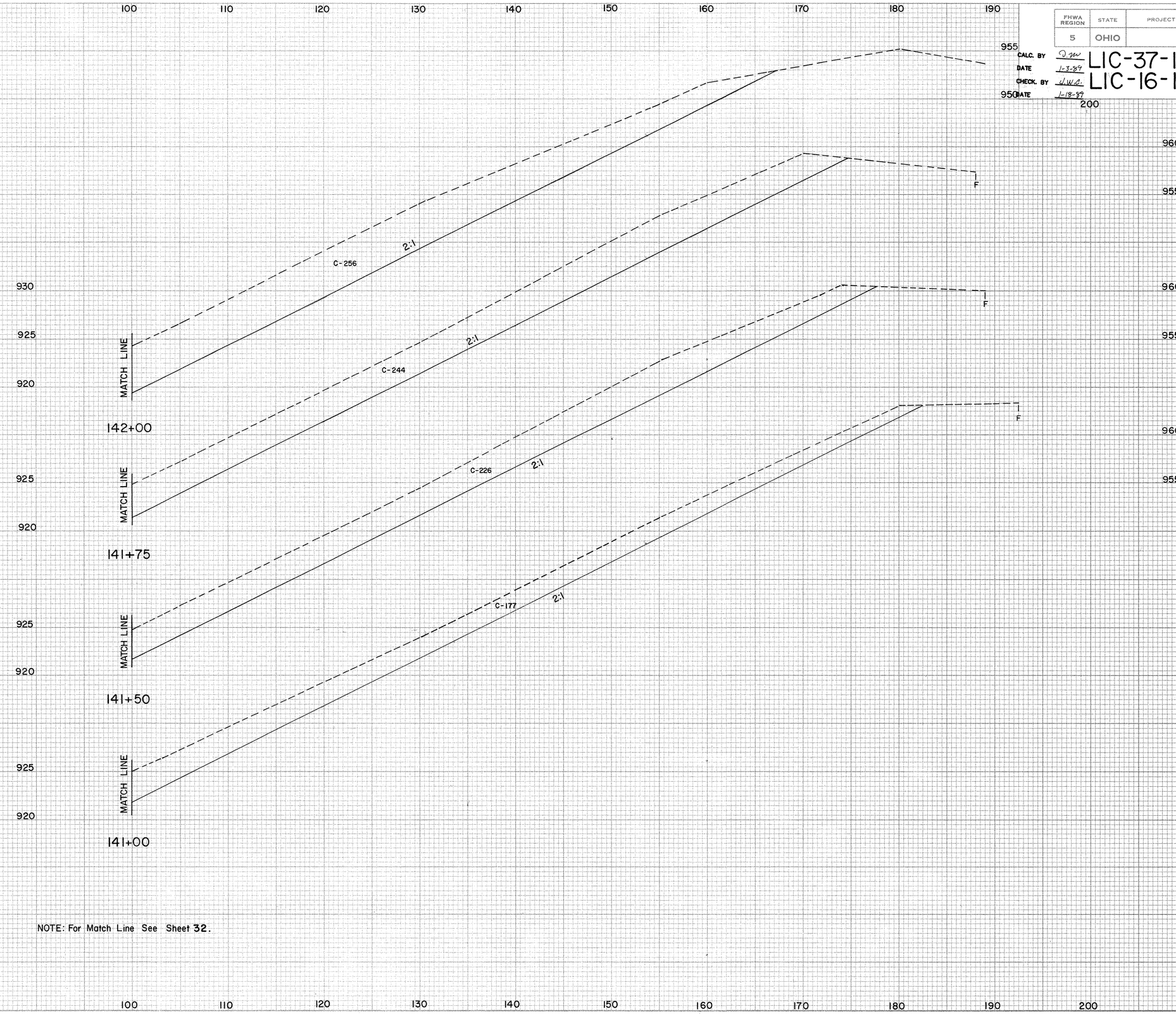

NOTE: For Match Line See Sheet 32.

141+00 – 142+00

FHWA REGION	STATE	PROJECT	
5	OHIO		

34/123

CALC. BY J.M.
DATE 1-5-89
CHECK. BY J.W.C.
DATE 1-18-89

LIC-37-15.61
LIC-16-14.26

SEEDING END WIDTH	SEEDING SQ. YDS.		END AREA CUT	END AREA FILL	VOLUME CUT	VOLUME FILL
	128					
23			3	17		
	62				3	14
22			3	14		
	61				3	12
22			3	13		
	62				4	11
23			6	11		
	60				6	8
20			7	6		
	46				5	3
13			3	1		
13	6		0	0	1	1

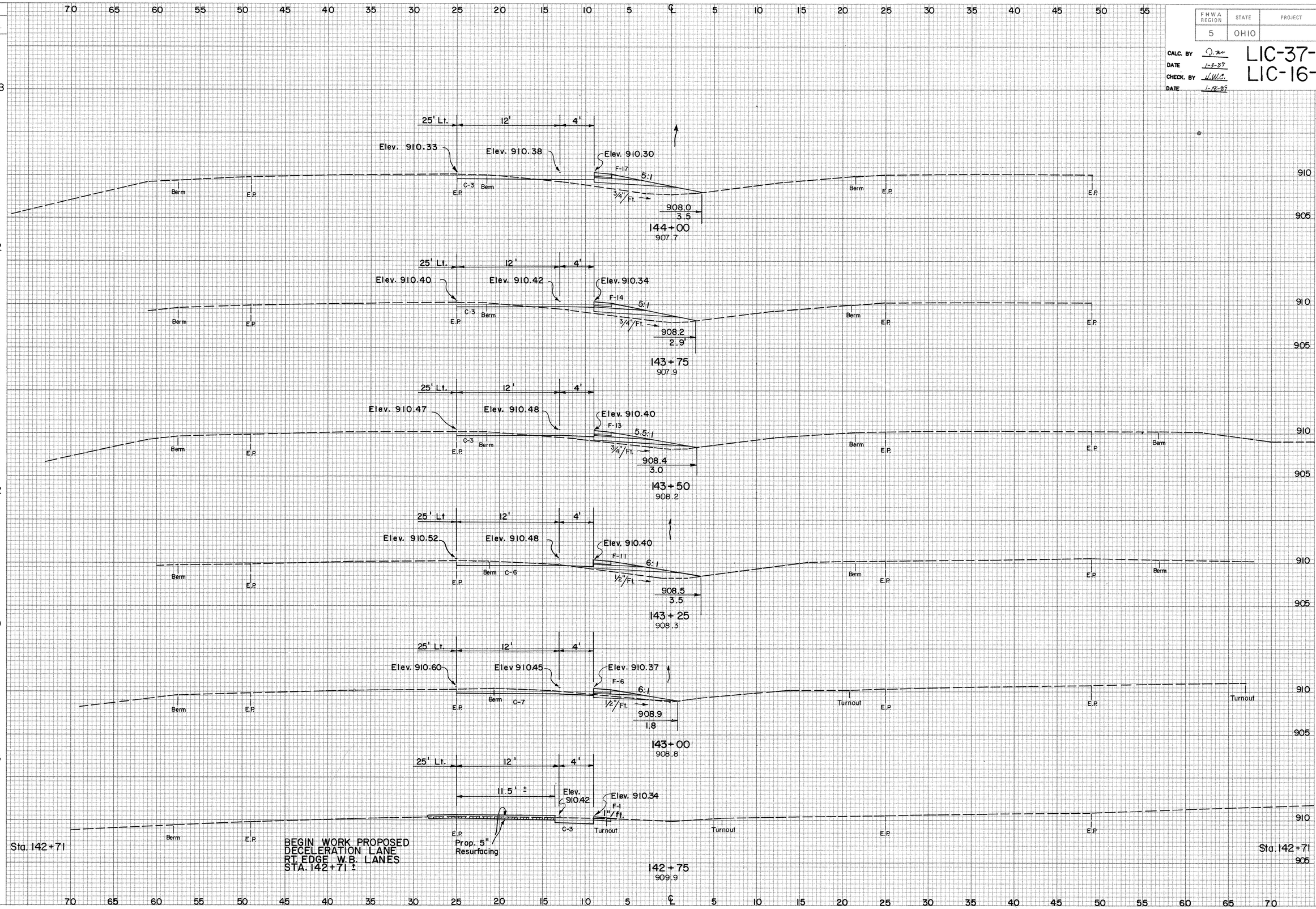

142+75 – 144+00

FHWA REGION	STATE	PROJECT	
5	OHIO		

35
123

CALC. BY J.M.
DATE 1-3-89
CHECK. BY J.W.C.
DATE 1-18-89

LIC-37-15.61
LIC-16-14.26

SEEDING END WIDTH	SEEDING SQ. YDS.	
	4494	Total

Seeding Total Carried To Sheet 59.

	END AREA CUT	END AREA FILL	VOLUME CUT	VOLUME *FILL
Totals			1720	389

*Item 203 Embankment, As Per Plan.
(Totals Carried to Sheet 59)

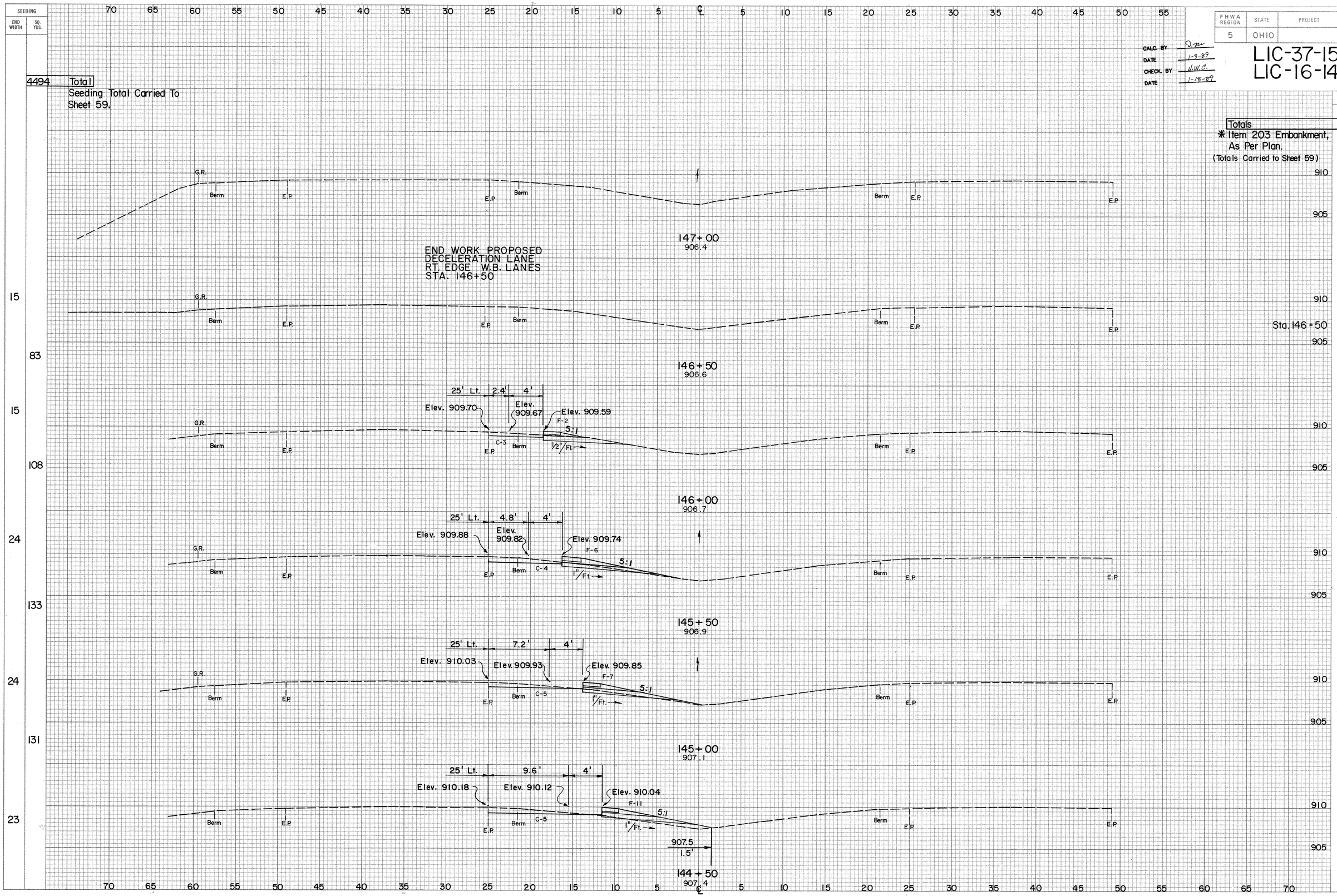

15	83							
15	108				3	2	3	2
24	133				4	6	6	7
24	131				5	7	8	12
23					5	11	9	17
							7	26

144+50 — 147+00

LIC-37-15.61
LIC-16-14.26

CALC. BY D.W.
DATE 1-3-89
CHECK. BY J.W.C.
DATE 1-18-89

NOTE: For quantities see sheet 60
For Drainage Details see sheets 73-80 & 85-88
For Sign Details see sheets 65-69
For Traffic Control see sheets 62-64

NOTE: FOR DETAILS NOT SHOWN SEE SHEETS 49 & 50.

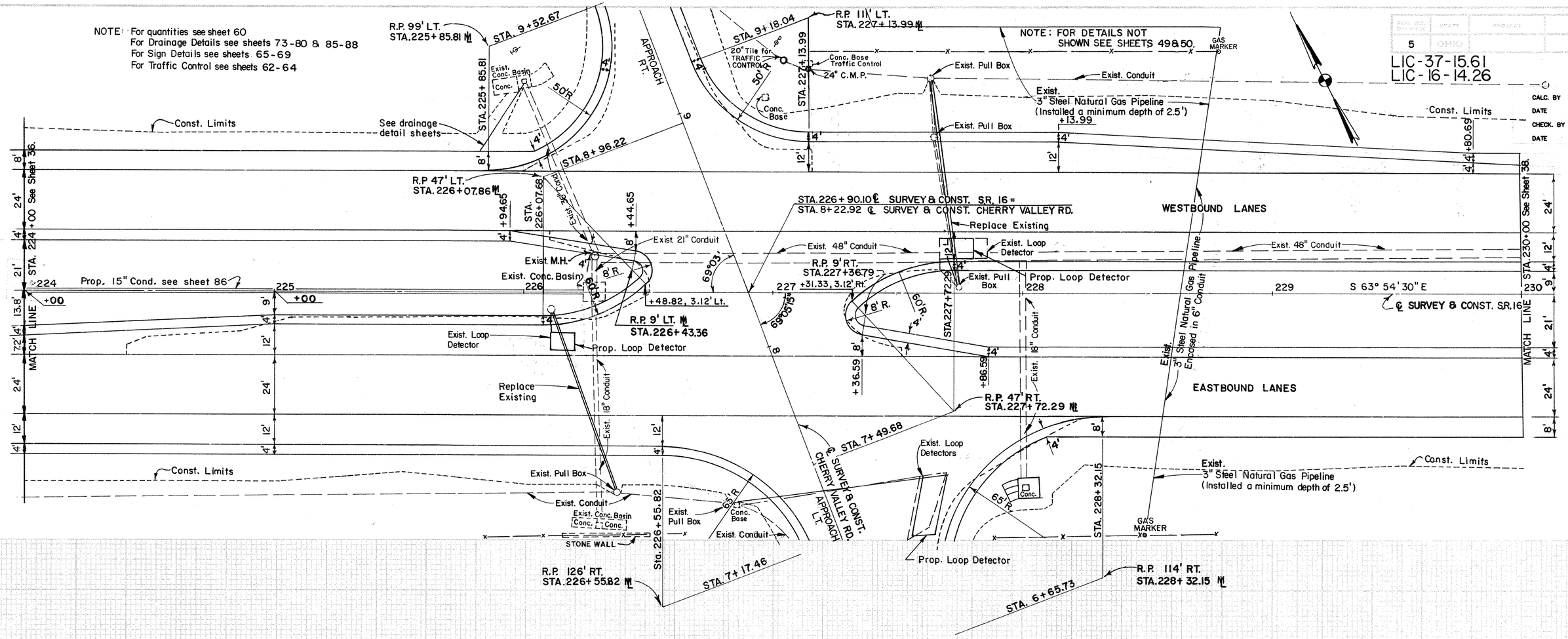

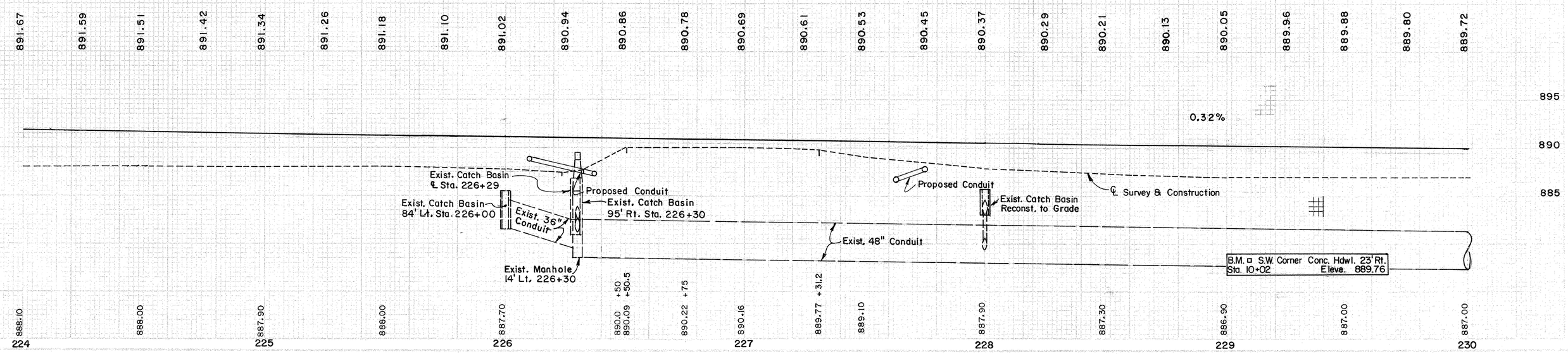

S.R. 16 AT CHERRY VALLEY RD. 224+00 – 230+00

CALC. BY	D.M.
DATE	1-3-89
CHECK. BY	J.W.C.
DATE	1-18-89

FED. RD. DIVISION	STATE	PROJECT	
5	OHIO		

LIC-37-15.61
LIC-16-14.26

NOTE: For quantities see sheet 60
For Drainage Details see sheets 73-80 & 85-88
For Sign Details see sheets 65-69
For Traffic Control see sheets 62-64

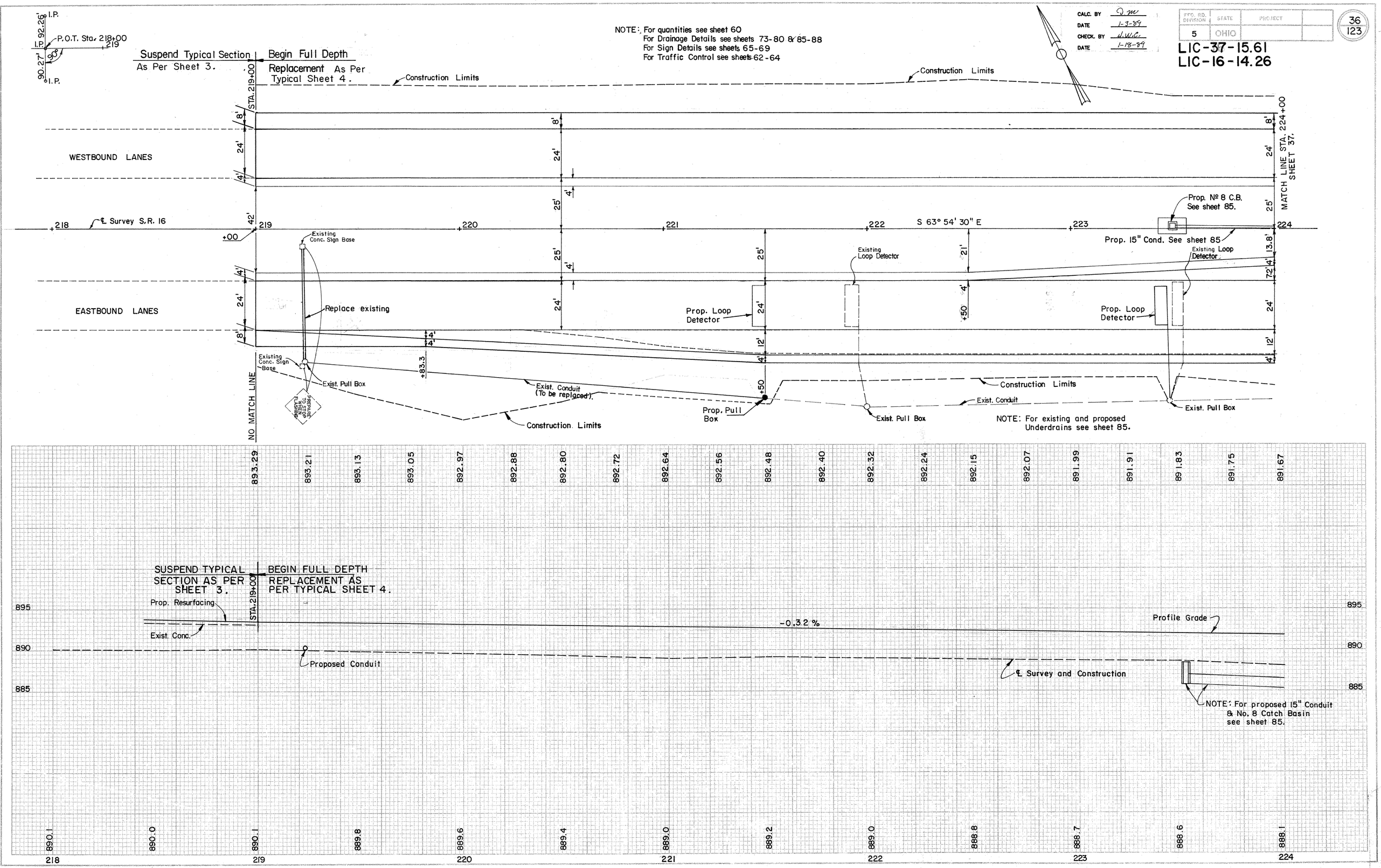

S.R. 16 AT CHERRY VALLEY RD. 218+00 — 224+00

FED. RD. DIVISION	STATE	PROJECT	
5	OHIO		

CALC. BY Q.W.
DATE 1-3-89
CHECK. BY W.W.C.
DATE 1-18-89

LIC-37-15.61
LIC-16-14.26

NOTE: For qantities see sheet 60
For Drainage Details see sheets 73-80 & 85-88
For Sign Details see sheet 65-69
For Traffic Control see sheet 62-64

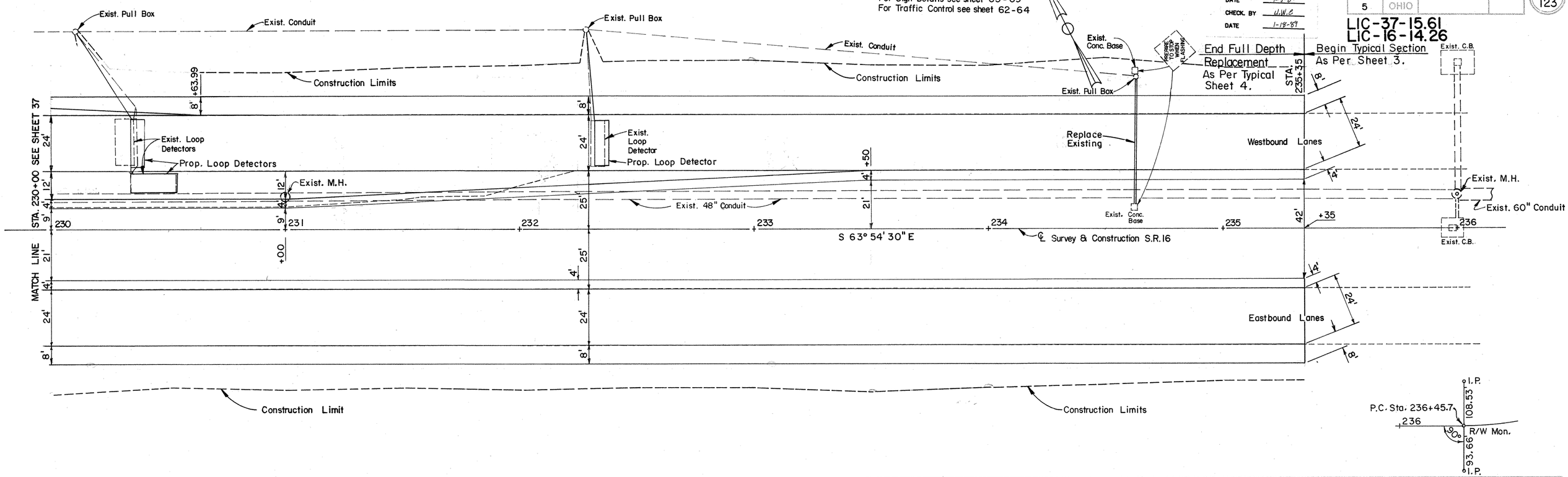

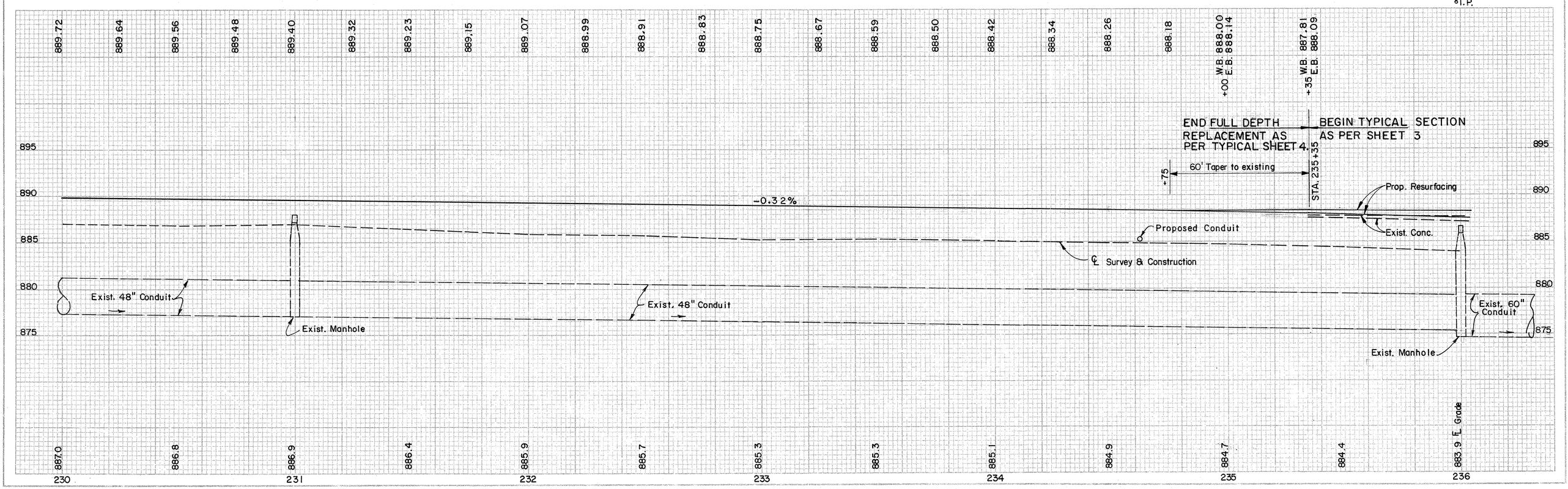

S.R. 16 AT CHERRY VALLEY RD. 230+00 — 236+00

CALC. BY O.W.
DATE 1-3-89
CHECK. BY J.W.C
DATE 1-18-89

LIC-37-15.61
LIC-16-14.26

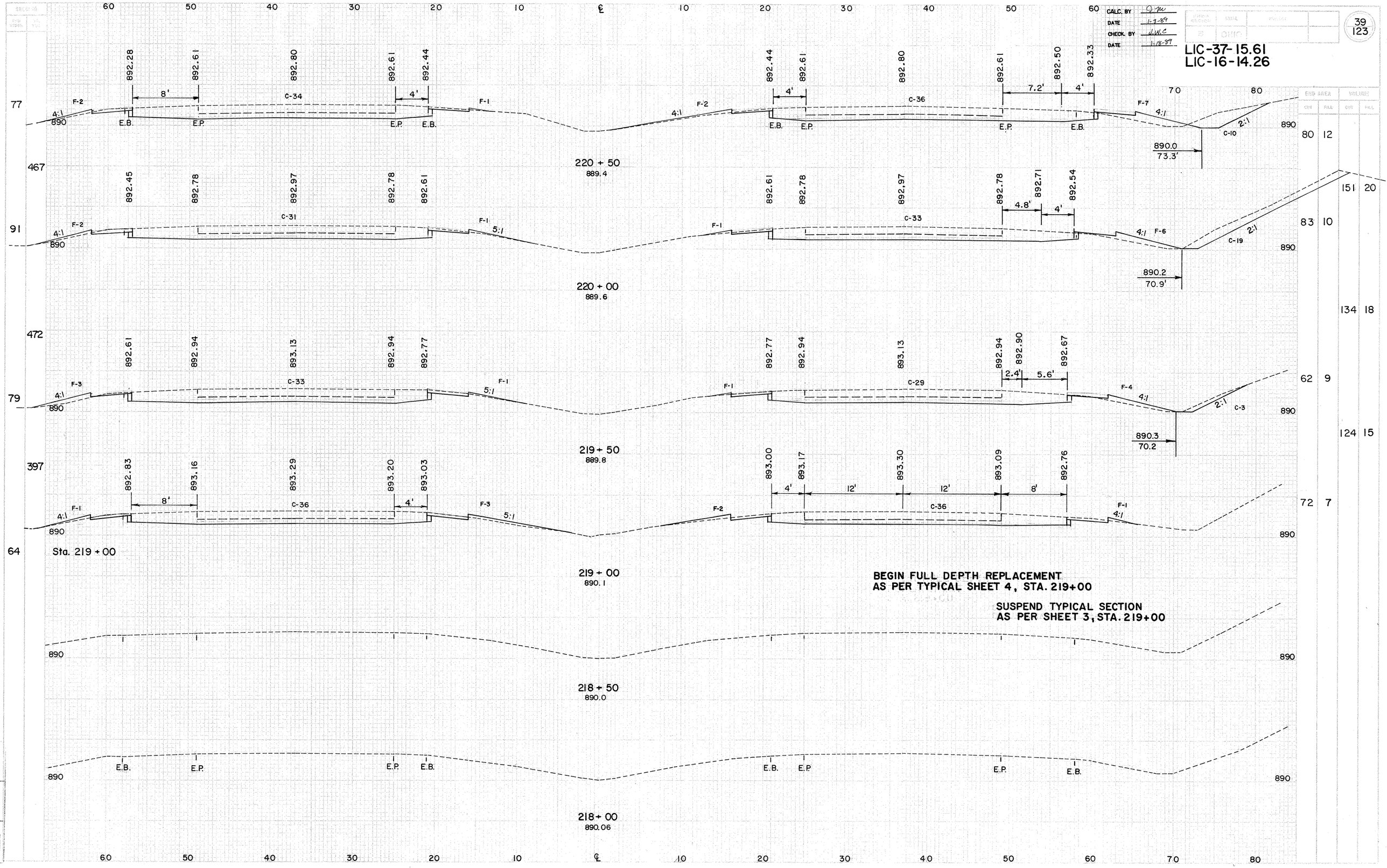

218+00 – 220+50

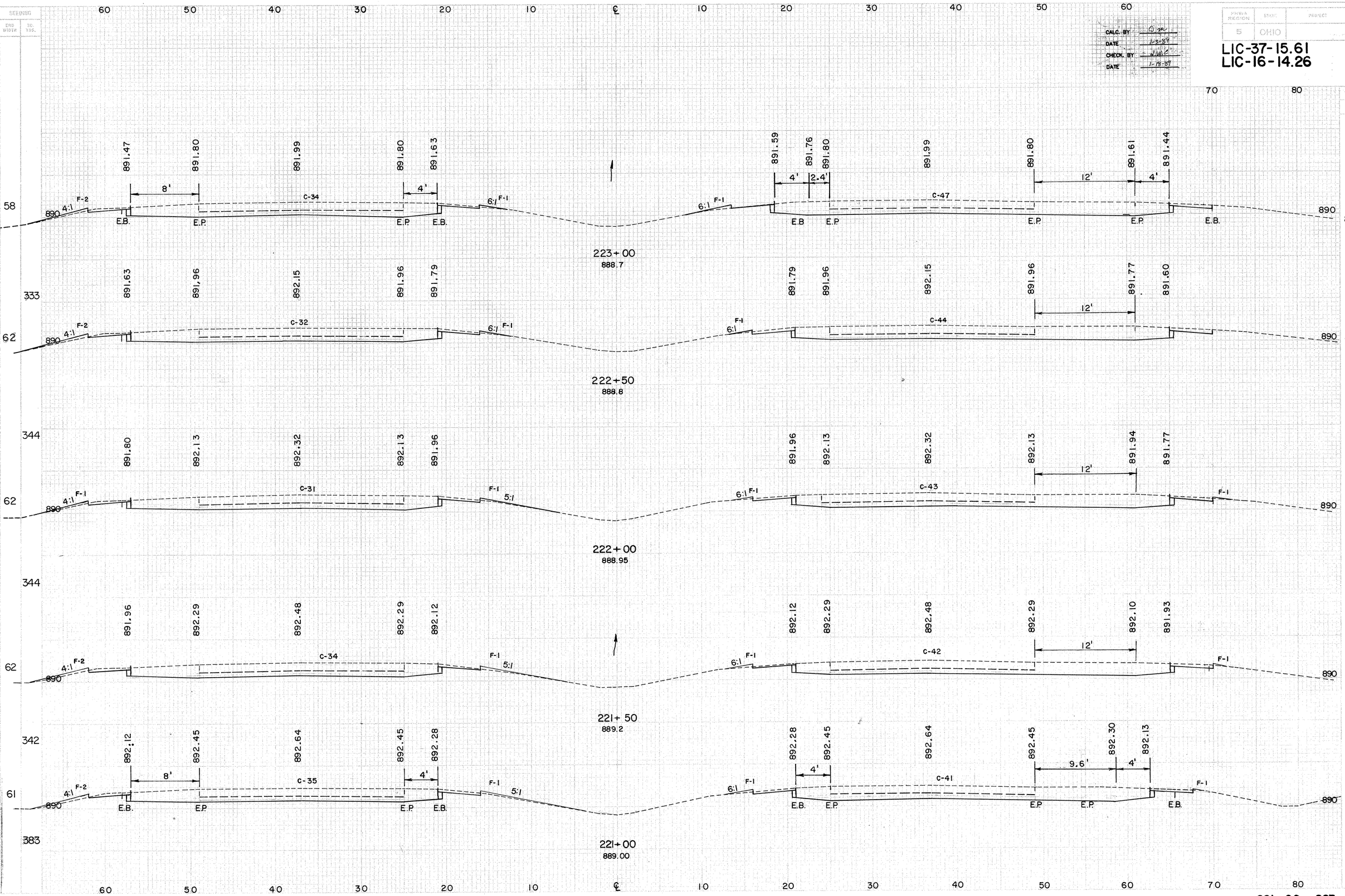

SEEDING
END WIDTH
SQ. YDS.
CALC. BY
DATE
CHECK. BY
DATE
FHWA REGION
STATE
PROJECT
5
OHIO
40
123
LIC-37-15.61
LIC-16-14.26
END AREA
VOLUME
CUT
FILL
223+00
888.7
222+50
888.8
222+00
888.95
221+50
889.2
221+00
889.00
C-34
C-32
C-31
C-35
C-47
C-44
C-43
C-42
C-41
E.B.
E.P.
F-1
F-2
4:1
6:1
5:1
8'
4'
2.4'
12'
9.6'
58
333
62
344
342
61
383
81
76
74
145
139
141
144
7
8
9
16
221+00—223+00

FEDERAL REGION	STATE	PROJECT
5	OHIO	

41
123

LIC-37-15.61
LIC-16-14.26

CALC. BY O.M.
DATE 1-3-89
CHECK. BY J.W.C.
DATE 1-18-89

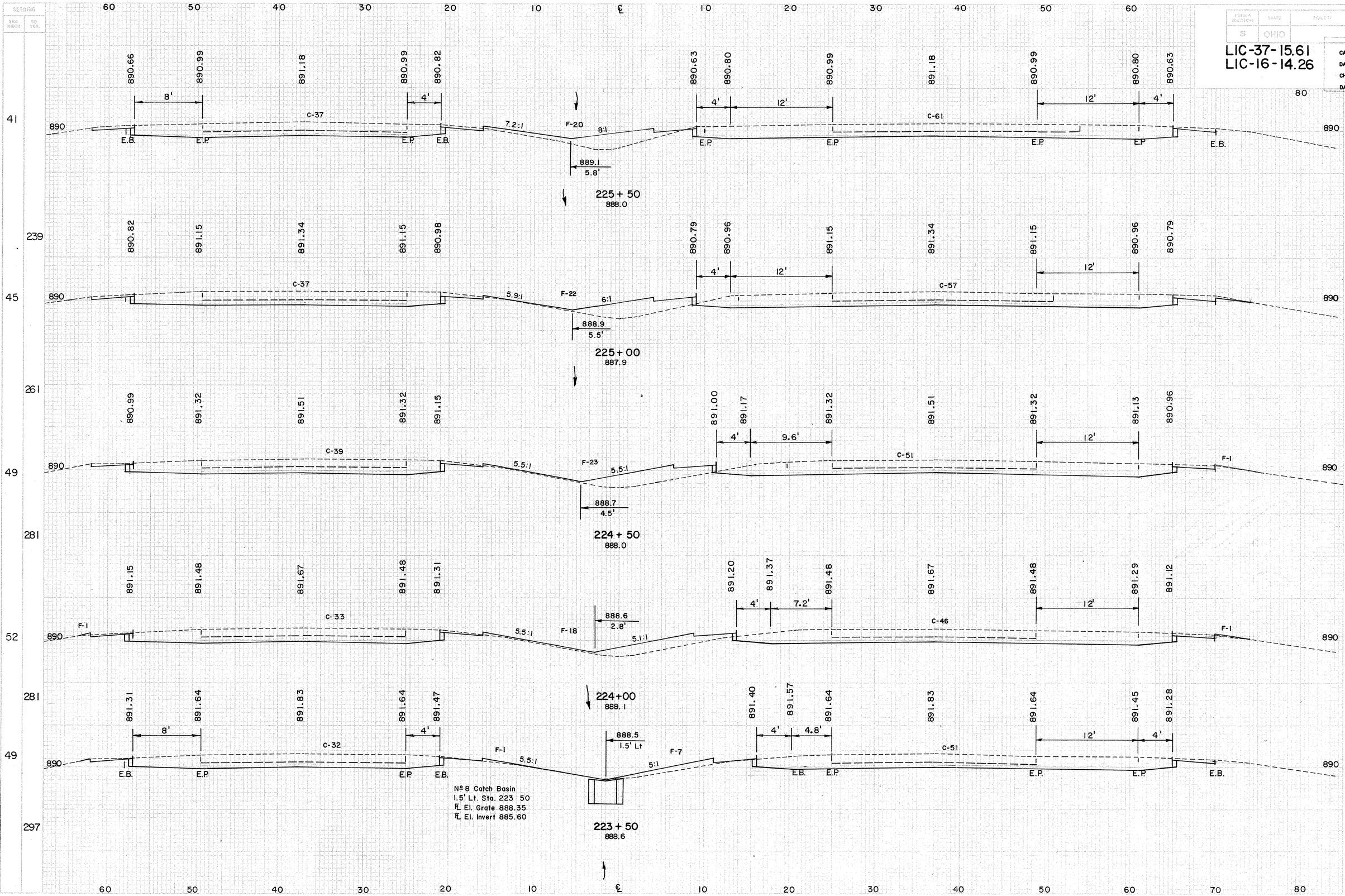

223+50 – 225+50

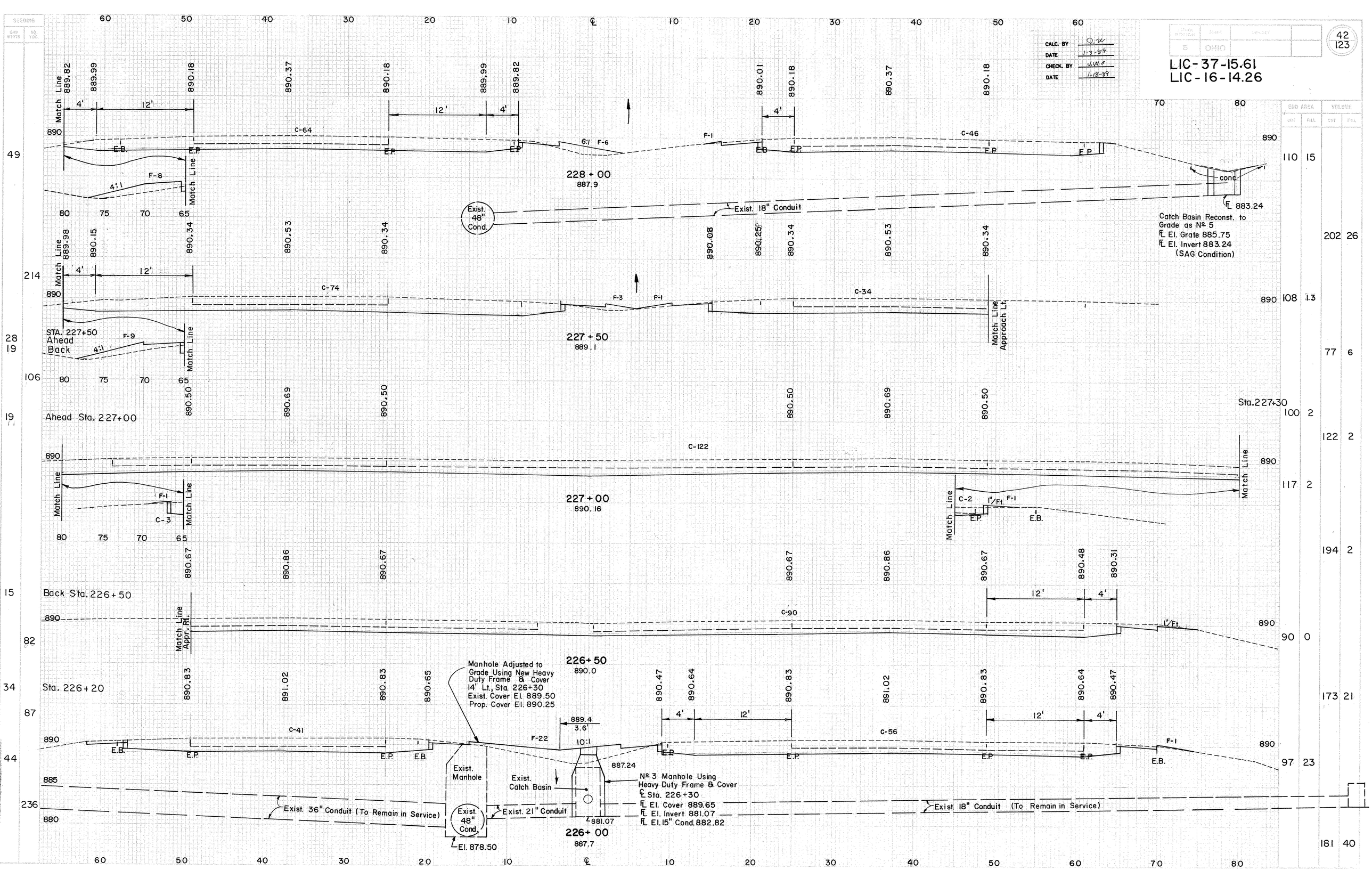

CALC. BY O.W.
DATE 1-3-89
CHECK. BY J.W.O.
DATE 1-18-89
42
123
LIC-37-15.61
LIC-16-14.26
Match Line
889.82
889.99
890.18
890.37
890.18
889.99
889.82
890.01
890.18
890.37
890.18
C-64
C-46
F-1
F-6
F-8
E.B.
E.P.
228+00
887.9
Exist. 48" Cond.
Exist. 18" Conduit
conc.
℄ 883.24
Catch Basin Reconst. to Grade as Nº 5
℄ El. Grate 885.75
℄ El. Invert 883.24
(SAG Condition)
889.98
890.15
890.34
890.53
890.34
890.08
890.25
890.34
890.53
890.34
C-74
C-34
F-3
F-9
STA. 227+50
Ahead
Back
227+50
889.1
Match Line Approach Lt.
890.50
890.69
890.50
890.50
890.69
890.50
Ahead Sta. 227+00
Sta. 227+30
C-122
227+00
890.16
C-3
C-2
1"/Ft.
890.67
890.86
890.67
890.67
890.86
890.67
890.48
890.31
Back Sta. 226+50
C-90
Match Line Appr. Rt.
226+50
890.0
890.83
891.02
890.83
890.65
890.47
890.64
890.83
891.02
890.83
890.64
890.47
Sta. 226+20
Manhole Adjusted to Grade Using New Heavy Duty Frame & Cover
14' Lt., Sta. 226+30
Exist. Cover El. 889.50
Prop. Cover El. 890.25
C-41
C-56
F-22
889.4
3.6'
10:1
887.24
Exist. Manhole
Exist. Catch Basin
Nº 3 Manhole Using Heavy Duty Frame & Cover
℄ Sta. 226+30
℄ El. Cover 889.65
℄ El. Invert 881.07
℄ El. 15" Cond. 882.82
Exist. 36" Conduit (To Remain in Service)
Exist. 21" Conduit
Exist. 18" Conduit (To Remain in Service)
Exist. 48" Cond.
El. 878.50
881.07
226+00
887.7
49
214
28
19
106
19
15
82
34
87
44
236
110 15
202 26
108 1.3
77 6
100 2
122 2
117 2
194 2
90 0
173 21
97 23
181 40
226+00 – 228+00

CALC. BY D.M.
DATE 1-3-89
CHECK. BY D.W.C.
DATE 1-18-89

FHWA REGION	STATE	PROJECT	
5	OHIO		

43
123

LIC-37-15.61
LIC-16-14.26

SEEDING END WIDTH	SQ. YDS.	END AREA CUT	END AREA FILL	VOLUME CUT	VOLUME FILL
48		101	11		
	283			178	23
54		91	14		
	294			167	25
52		89	13		
	303			171	34
57		96	24		
	344			181	47
67		99	27		
	322			194	39

228+50 — 230+50

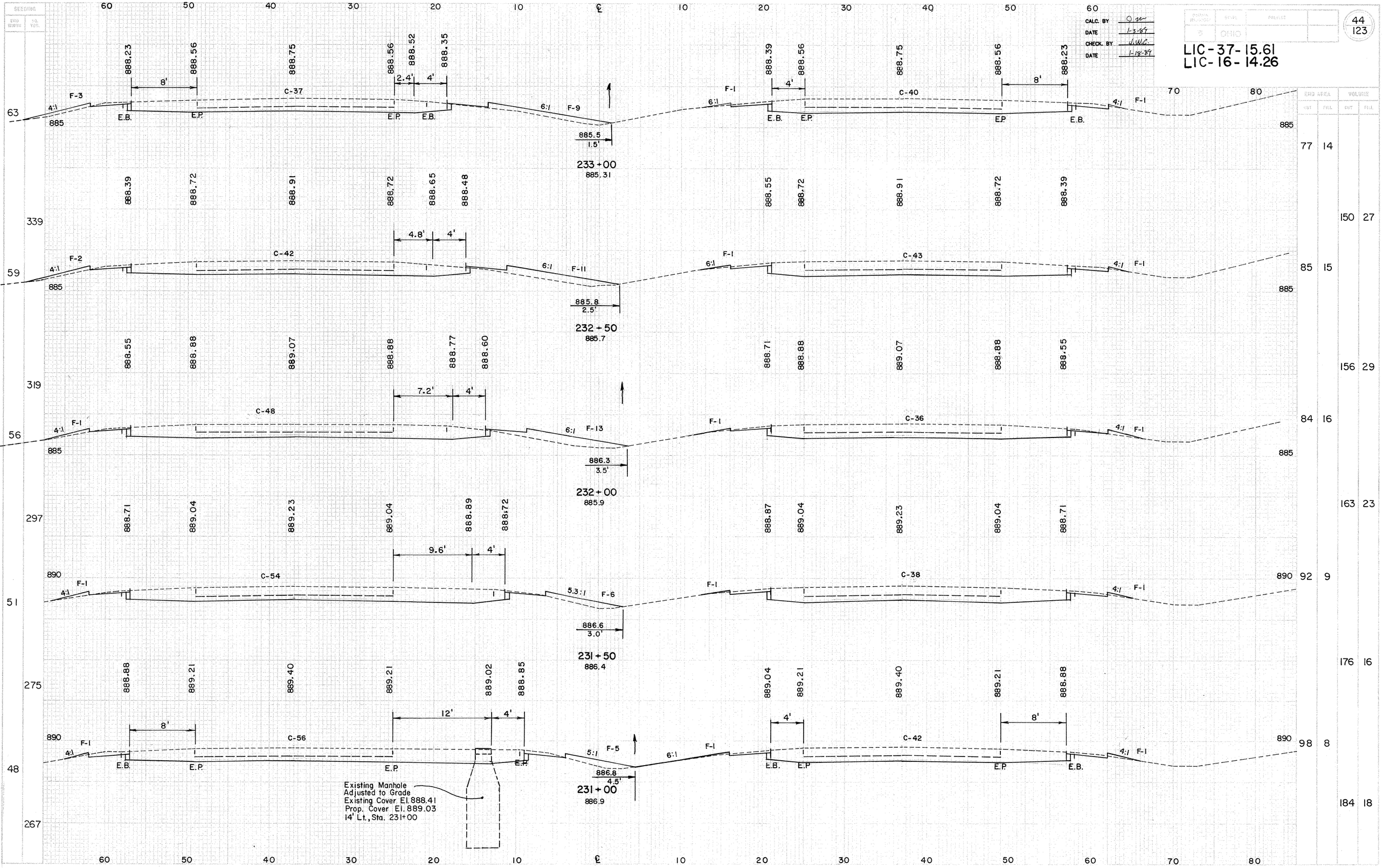

CALC. BY
DATE 1-3-89
CHECK. BY J.W.C.
DATE 1-18-89
LIC-37-15.61
LIC-16-14.26
44
123
SEEDING
END WIDTH
SQ. YDS.
END AREA
VOLUME
CUT
FILL
233+00
885.31
232+50
885.7
232+00
885.9
231+50
886.4
231+00
886.9
Existing Manhole
Adjusted to Grade
Existing Cover El. 888.41
Prop. Cover El. 889.03
14' Lt., Sta. 231+00

231+00 — 233+00

CALC. BY	DJM
DATE	1-13-89
CHECK. BY	W.W.C.
DATE	1-18-89

STATE REGION	STATE	FEDERAL PROJECT	
5	OHIO		

LIC-37-15.61
LIC-16-14.26

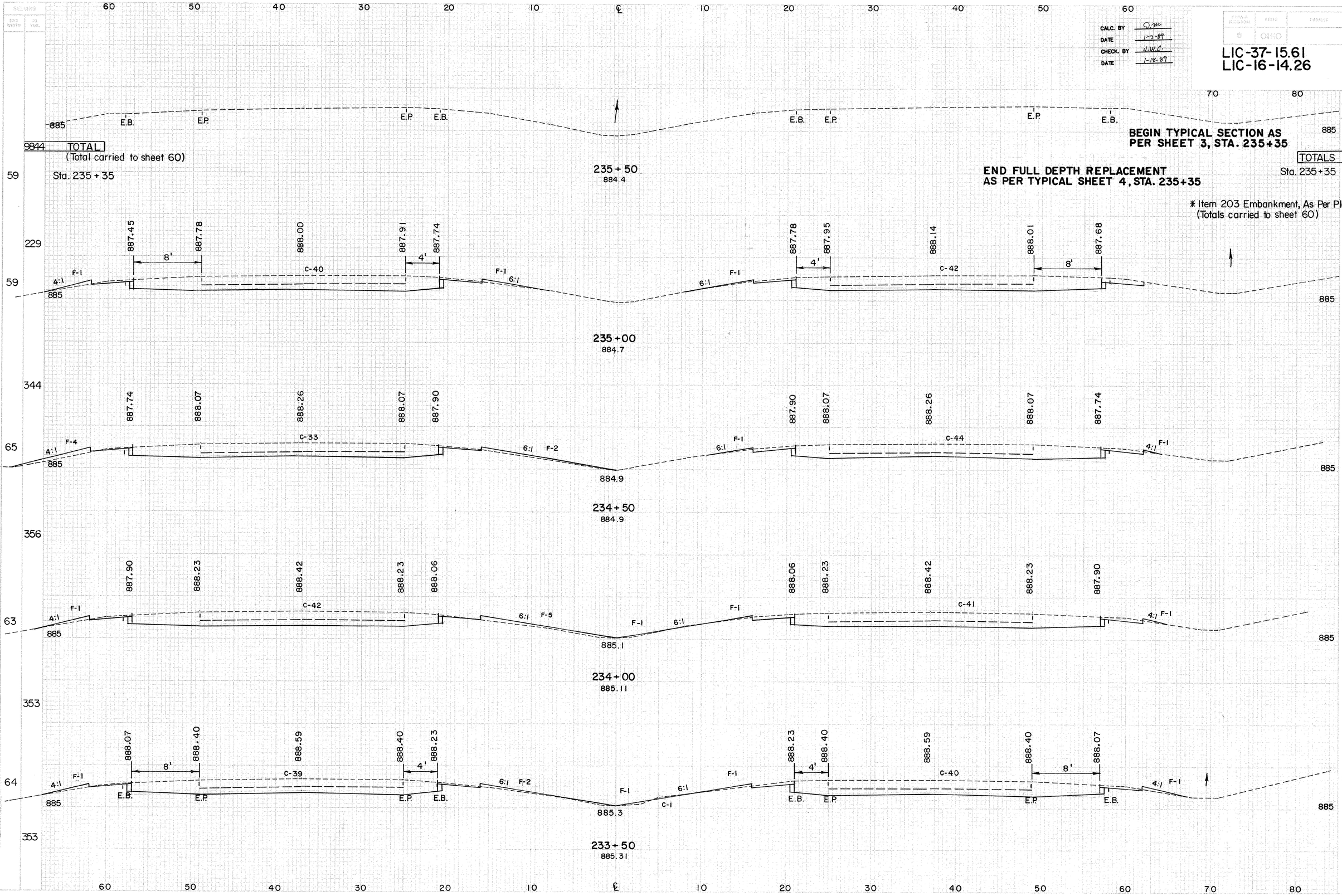

	END AREA CUT	END AREA FILL	VOLUME CUT	VOLUME * FILL
TOTALS			5289	701
Sta. 235+35	82	3		
			106	4
	82	3		
			147	10
	77	8		
			148	16
	83	9		
			151	14
	80	6		
			145	19

233+50 – 235+50

FED. RD. DIVISION	STATE	PROJECT	
5	OHIO		

46
123

LIC-37-15.61
LIC-16-14.26

CALC. BY D.M.
DATE 1-3-89
CHECK. BY J.W.C.
DATE 1-18-89

NOTE: For quantities see sheet 60
For Drainage Details see sheets 73-80 & 85-88
For Sign Details see sheets 65-69
For Traffic Control see sheets 62-64

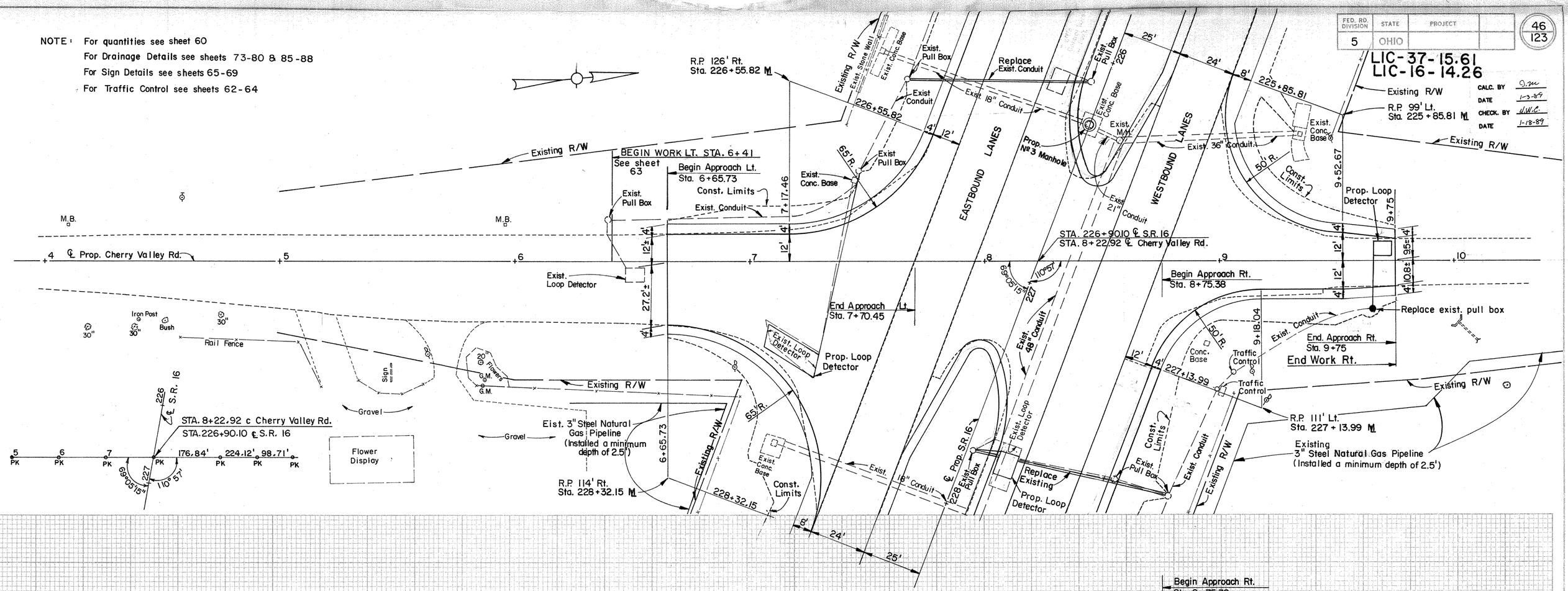

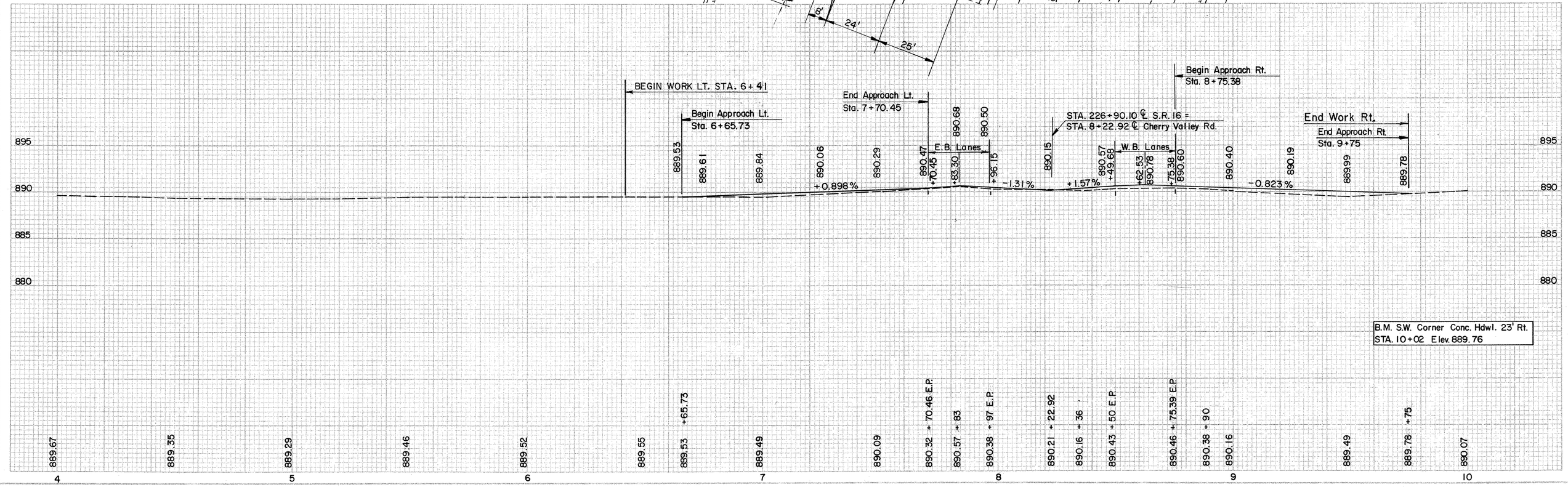

CHERRY VALLEY ROAD

SEEDING	
END WIDTH	SQ. YDS.

LOWER REGION	STATE	PROJECT	
5	OHIO		

47
123

LIC-37-15.61
LIC-16-14.26

CALC. BY Q.M.
DATE 1-3-89
CHECK. BY J.W.C.
DATE 1-18-89

END AREA		VOLUME	
CUT	FILL	CUT	FILL

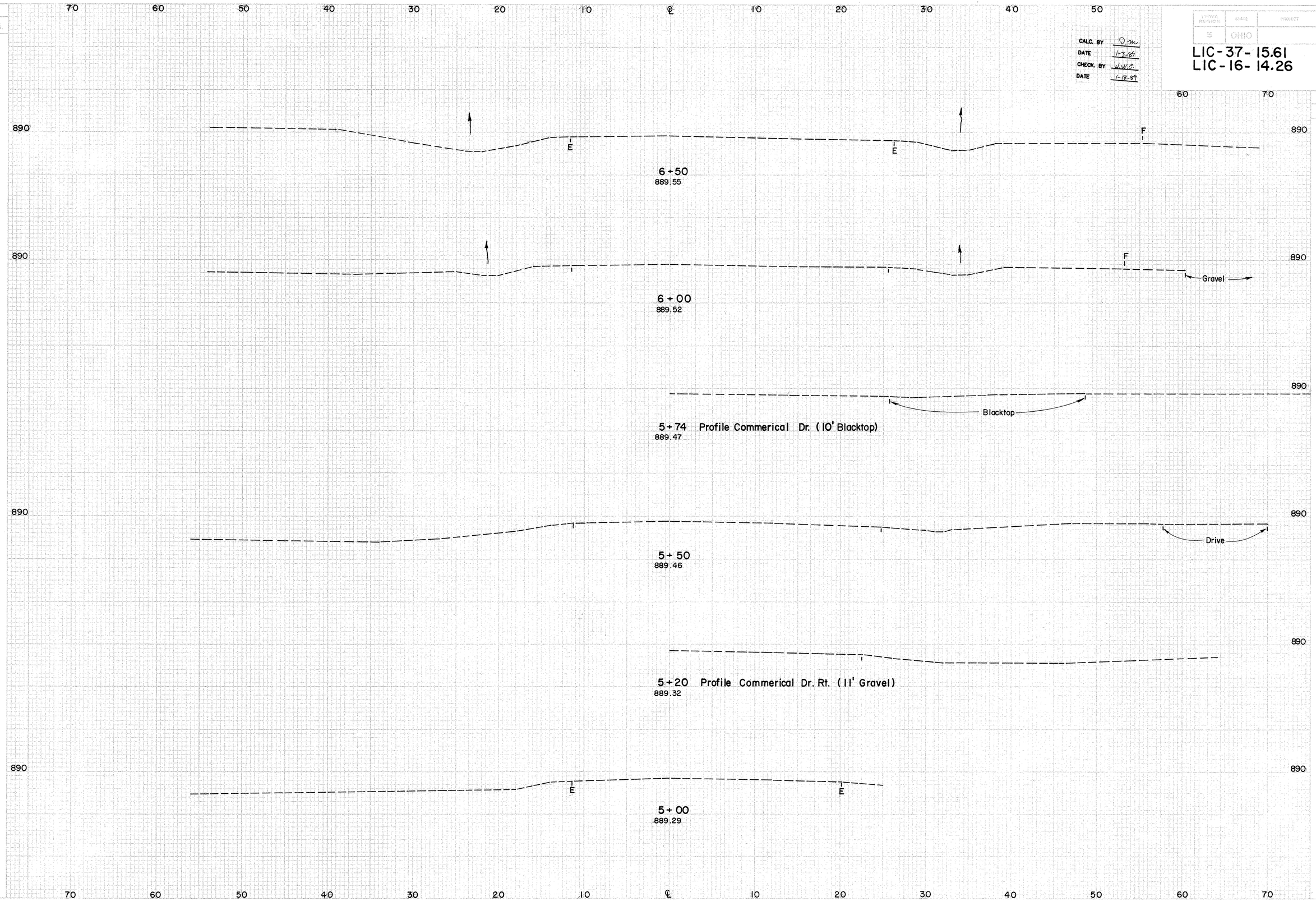

CHERRY VALLEY RD. 5+00 — 6+50

FHWA REGION	STATE	PROJECT
5	OHIO	

LIC-37-15.61
LIC-16-14.26

CALC. BY Q.M.
DATE 1-3-89
CHECK. BY J.W.C.
DATE 1-18-89

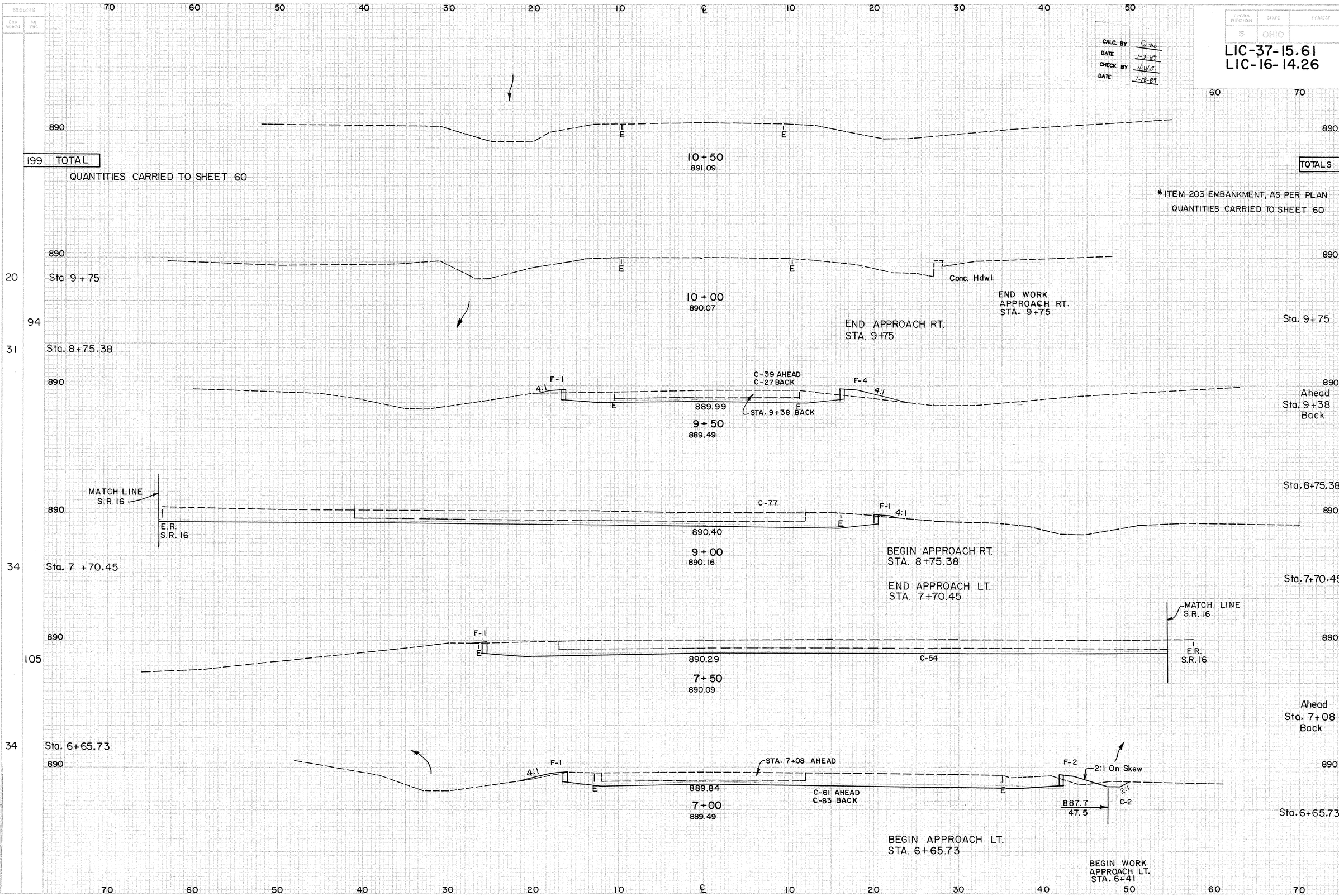

	END AREA CUT	END AREA FILL	VOLUME CUT	VOLUME FILL
TOTALS			417	#17
Sta. 9+75	59	0		
			67	3
Ahead	39	5		
Sta. 9+38 Back	27	5		
			121	7
Sta. 8+75.38	77	1		
Sta. 7+70.45	54	1		
			41	1
	54	1		
			91	3
Ahead	63	3		
Sta. 7+08 Back	85	3		
			25	1
	85	3		
			72	2
Sta. 6+65.73	29	0		

CHERRY VALLEY RD. 7+00 — 10+50

FHWA REGION	STATE	PROJECT	
5	OHIO		

LIC-37-15.61
LIC-16-14.26

CALC. BY D.M.
DATE 1-3-89
CHECK. BY J.W.C.
DATE 1-18-89

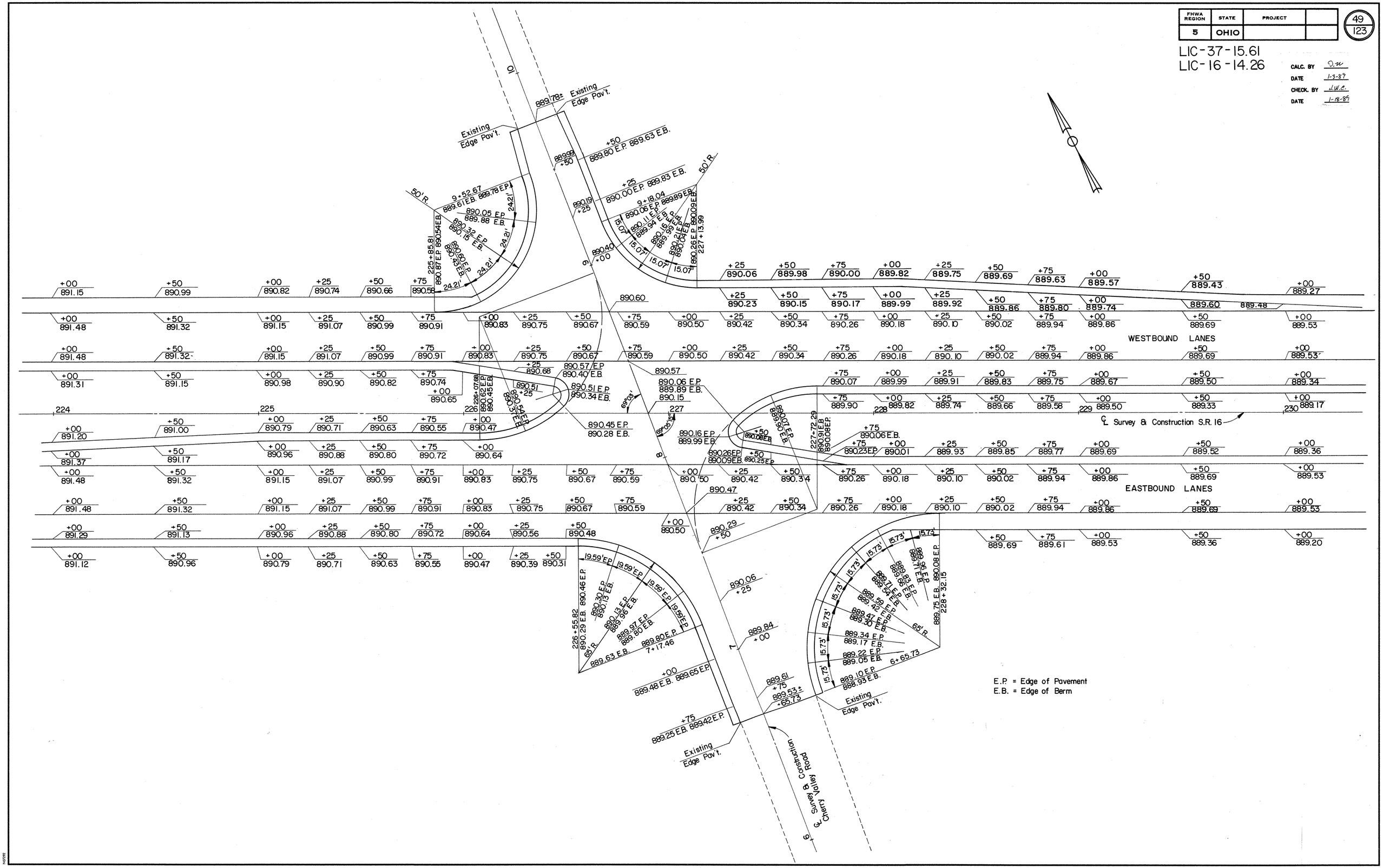

PAVEMENT ELEVATIONS AT CHERRY VALLEY ROAD INTERSECTION

CALC. BY	D.W.
DATE	1-3-89
CHECK. BY	J.W.C.
DATE	1-18-89

FHWA REGION	STATE	PROJECT	
5	OHIO		

50
123

LIC-37-15.61
LIC-16-14.26

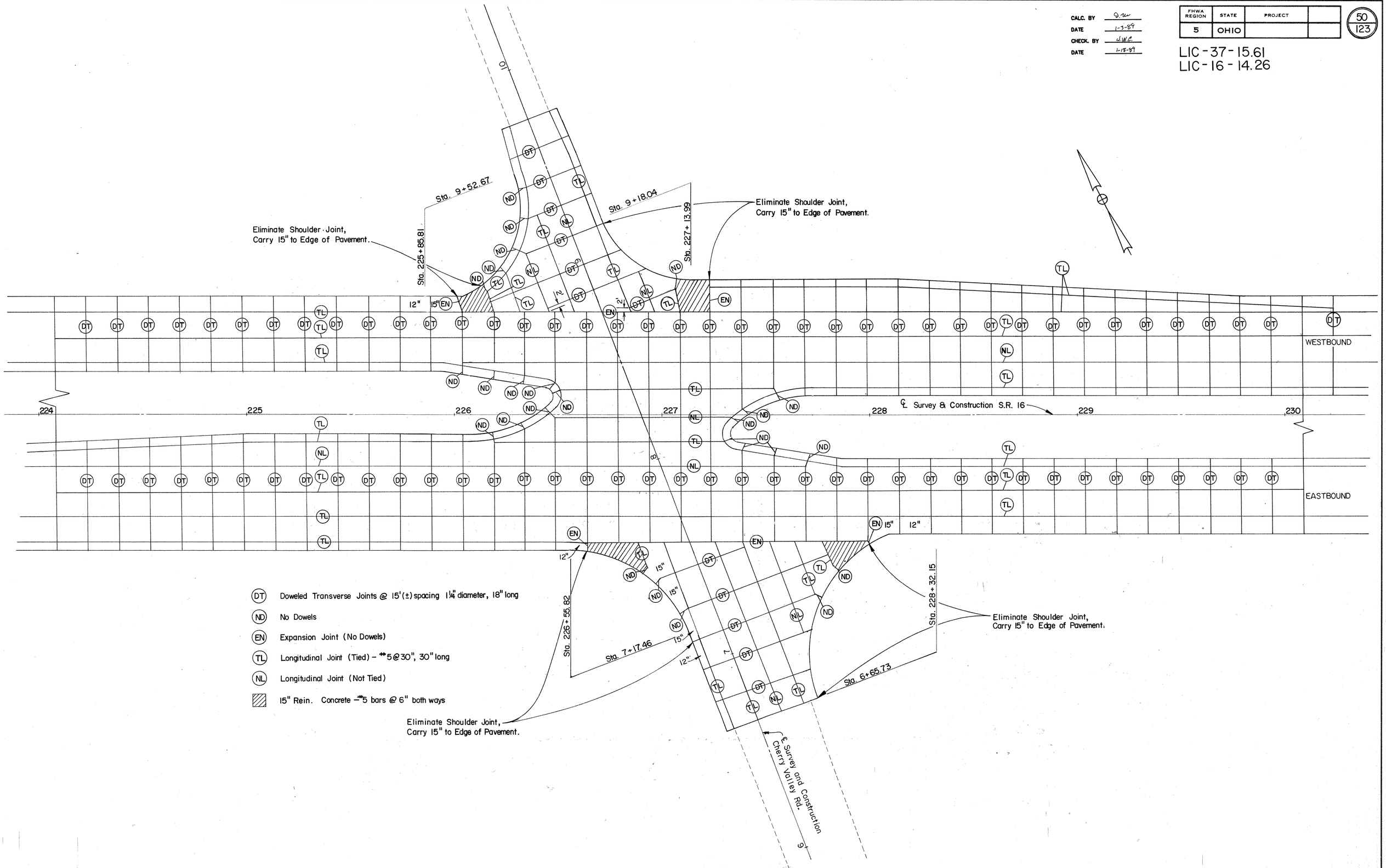

JOINT DETAILS AT CHERRY VALLEY ROAD INTERSECTION

FHWA REGION	STATE	PROJECT	
5	OHIO		

CALC. BY D.M.
DATE 1-3-89
CHECK. BY J.W.E.
DATE 1-18-89

51
123

LIC-37-15.61
LIC-16-14.26

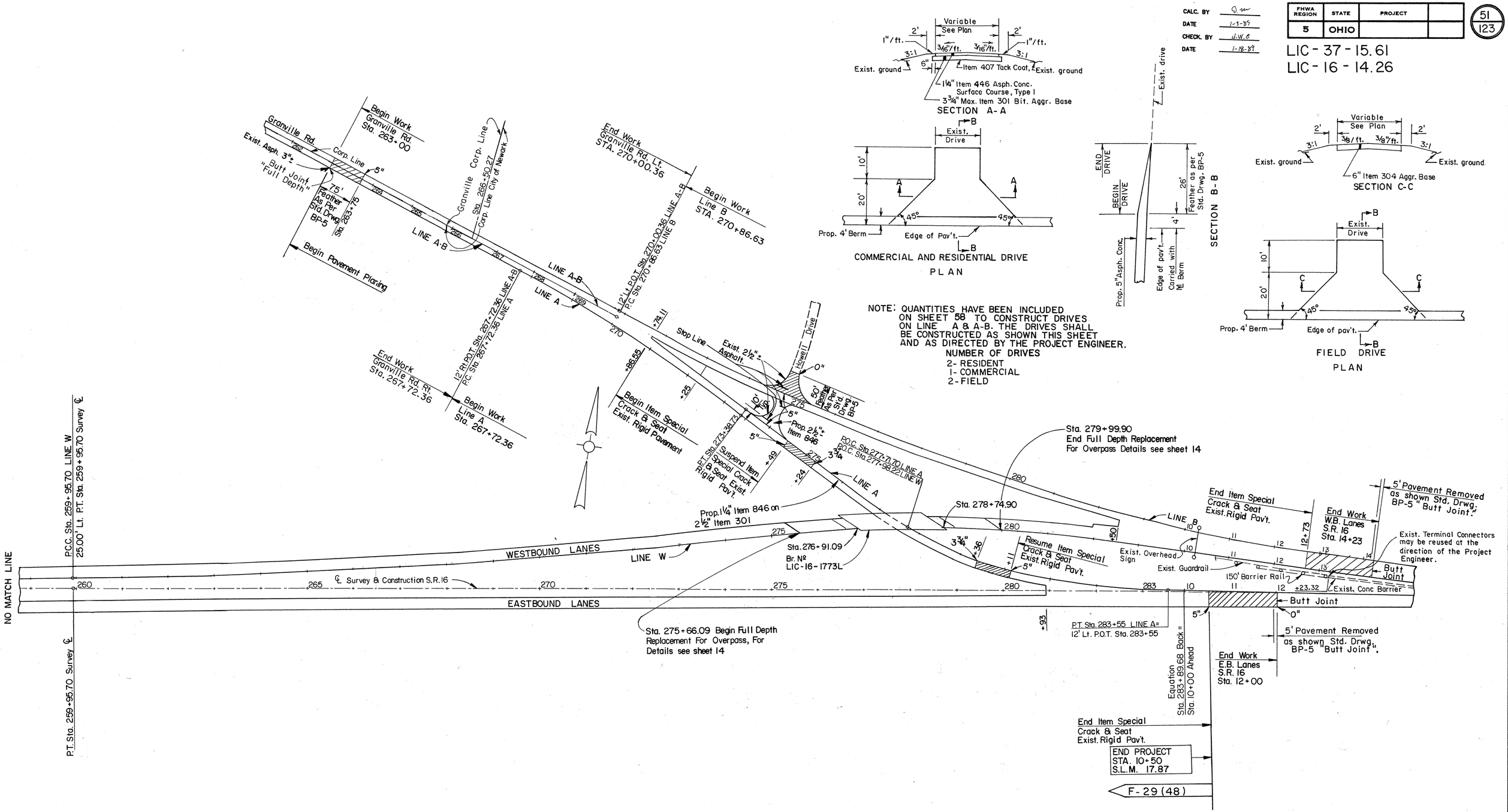

NOTE: QUANTITIES HAVE BEEN INCLUDED ON SHEET 58 TO CONSTRUCT DRIVES ON LINE A & A-B. THE DRIVES SHALL BE CONSTRUCTED AS SHOWN THIS SHEET AND AS DIRECTED BY THE PROJECT ENGINEER.
NUMBER OF DRIVES
2- RESIDENT
1- COMMERCIAL
2- FIELD

NOTE: X-Hatched area denotes that area to be feathered as per Std. Drwg. BP-5.

SR 16 & GRANVILLE ROAD INTERCHANGE

PAVEMENT DATA TABLE

CALC. BY	DATE 6-3-97
CHKD. BY	DATE 6-18-97

LIC-37-15.61
LIC-16-14.26

OHIO
FHWA REGION 5

* CITY PARTICIPATION

* * SEE STD. DRWG. BP-5

PAVEMENT DATA

STATION TO STATION EASTBOUND	W.P. FEET	LENGTH LIN. FEET	PAVEMENT AREA SQ. YD.	407 TACK COAT GAL.	SPECIAL CRACKING AND SEATING EXISTING 451 RIGID PAVEMENT SQ.YD.	446 ASPH.CONC SURFACE COURSE, TYPE 1 AC-20 1 1/4 CU. YD.	254 PAVEMENT PLANING BITUMINOUS SQ.YD.	304 AGGREGATE BASE 6" CU.YD.	301 BITUMINOUS AGGREGATE BASE 3 3/4" OR AS SHOWN CU.YD.	202 Pavement Removed (Including Asphalt Surface) SQ.YD.	203 EXCAVATION CU.YD.	203 SUBGRADE COMPACTION SQ.YD.	408 BIT. PRIME COAT GAL.	202 WEARING COURSE REMOVED SQ.YD.
66+50 – 67+00	24	50.0	133.3	13.3		4.6	133.3		3" AVE.11.1					
67+00 – 162+73.99	24	9573.99	25,530.6	2553.1	25,532.1	886.5	25,532.1		2659.4					
162+73.99 – 163+98.99	24	125.0	333.3	6.7		12.4		44.2	8 3/4"64.4	265.1	28.5	265.1	106.0	66.7
163+98.99 – 165+74.68	BRIDGE LIMITS FOR DETAILS SEE SHEETS 90-115													
165+74.68 – 166+99.68	24	125.0	333.3	6.7		12.4		44.2	8 3/4"64.4	265.1	28.5	265.1	106.0	66.7
166+99.68 – 180+65.21	24	1365.53	3641.4	364.1	3641.4	126.4	3641.4		379.3					
180+65.21 – 181+90.21	24	125.0	333.3	6.7		12.4		44.2	8 3/4"64.4	265.1	28.5	265.1	106.0	66.7
181+90.21 – 183+73.54	BRIDGE LIMITS FOR DETAILS SEE SHEETS 90-115													
183+73.54 – 184+98.54	24	125.0	333.3	6.7		12.4		44.2	8 3/4"64.4	265.1	28.5	265.1	106.0	66.7
184+98.54 – 219+00	24	3401.46	9070.6	907.0	9070.6	314.9	9070.6		944.8					
219+00 – 235+35	FULL DEPTH REPLACEMENT FOR QUANTITIES & DETAILS SEE SHEETS 36-50 & 60													
235+35 – 259+77.84	24	2442.84	6514.2	651.4	6514.2	226.2	6514.2		678.6					
*259+77.84 – 283+89.68B	24	2411.84	6431.6	643.2	6431.6	223.3	6431.6		670.0					
*10+00 A – 10+50	36	50	200.0	20.0	200.0	6.9	200.0		20.8					
*10+50 – 12+00	36	150.0	600.0	60.0		AVE.20B			1 7/8AVE.31.2	** 20.0				
71+40 – 72+40	6 AVE	100.0	66.7	6.7	66.7	2.3	66.7		6.9					
72+40 – 73+73.37	12	133.37	177.8	17.8	177.8	6.2	177.8		18.5					
RAMP C														
73+73.37 – 77+35.18	23.5 AVE	361.81	944.7	94.5	944.7	32.8	944.7		98.4					
77+35.18 – 78+35.18	17 AVE	100.0	188.9	18.9	188.9	6.6	188.9		19.7					
78+35.18 – 85+92.91	16	757.73	1347.1	134.7	1347.1	46.8	1347.1		140.3					
85+92.91 – 86+42.91	16	50.0	88.9	8.9		3.1	88.9		2 3/4"AVE.6.8					
EXTRA FOR RADI	VAR		10.6	1.1		0.4	10.6		2 3/4"AVE.0.8					
S.R. 16														
EXTRA FOR DRIVE RT.	21	15.0	35.0	3.5		1½" Ave. 1.5								
741+54 – 742+29	24	75.0	200.0	20.0		AVE. 6.9	200.0		2¼" 12.5					
742+29 – 746+79.23	24	450.23	1200.6	120.2		41.7	1202.2		2½" 83.4					
746+79.23 – 747+29.23	24	50.0	133.3	13.3		2⅜" AVE.10.2	133.3							
EASTBOUND														
77+37.11 – 78+37.11	9 AVE	100.0	100.0	10.0	100.0	3.5	100.0		10.4					
RAMP D														
83+09.71 – 85+34	18 AVE	224.29	448.6	44.9		15.6	448.6		2½" 31.2					
85+34 – 86+34	17 AVE	100.0	188.9	18.9		6.6	188.9		2½" 13.1					
86+34 – 87+00	16	66.0	117.3	11.7		4.1	117.3		2½" 8.1					
87+00 – 87+75	16	75.0	133.3	13.3		AVE.4.6	133.3		3⅜" 13.9					
87+75 – 91+44	16	369.0	656.0	65.6	656.0	22.8	656.0		68.3					
91+44 – 92+44	15 AVE	100.0	166.7	16.7	166.7	5.8	166.7		17.4					
92+44 – 93+49	15 AVE	105.0	175.0	17.5	175.0	6.1	175.0		18.2					
93+49 – 95+08.92	16 AVE	159.92	284.3	28.4	284.3	9.9	284.3		29.6					
RAMP D-D	20	75	166.7	16.7		5.8	166.7		2½" 11.6					
EXTRA FOR RADI	VAR		33	3.3		1.1	33.0		2½" 23					
EASTBOUND														
95+08.92 – 100+70.0	12	561.08	748.1	74.8	748.1	26.0	748.1		77.9					
747+29.81 – 749+75.89	BRIDGE LIMITS FOR DETAILS SEE SHEETS 90-115													
744+28.35 – 745+39.90	5 AVE	111.55	62.0	6.2		2.2	62.0		2½" 4.3					
STATE & FEDERAL				5283.3	49,613.6	1880.8	52,531.7	176.8	5624.4	1060.4	114.0	1060.4	424.0	266.8
CITY, STATE & FEDERAL				723.2	6631.6	251.0	6631.6		722.0	20.0				
TOTALS (CARRIED TO SHEET 61)														

* CITY PARTICIPATION

PAVEMENT DATA

STATION TO STATION	W.P. FEET	LENGTH LIN. FEET	PAVEMENT AREA SQ. YD.	407 TACK COAT GAL.	SPECIAL CRACKING AND SEATING EXISTING 451 RIGID PAVEMENT SQ.YD.	446 ASPH.CONC SURFACE COURSE, TYPE 1 AC-20 1 1/4 CU.YD.	254 PAVEMENT PLANING BITUMINOUS SQ.YD.	304 AGGREGATE BASE 6" CU.YD.	301 BITUMINOUS AGGREGATE BASE 3 3/4" OR AS SHOWN CU.YD.	202 Pavement Removed (Including Asphalt Surface) SQ.YD.	203 EXCAVATION CU.YD.	203 SUBGRADE COMPACTION SQ.YD.	408 BIT. PRIME COAT GAL.	202 WEARING COURSE REMOVED SQ.YD.
RAMP G														
100+70.00 – 103+64.93	23.5 AVE	294.93	770.1	77.0	770.1	26.7	770.1		80.2					
103+64.93 – 104+64.93	17 AVE	100.0	188.9	18.9	188.9	6.6	188.9		19.7					
104+64.93 – 111+94.6	16	729.67	1297.2	129.7	1297.2	45.0	1297.2		135.1					
111+94.6 – 112+44.6	16	50.0	88.9	8.9		3.1	88.9		2 3/4"AVE 6.8					
EXTRA AREA FOR RADI	VAR		11	1.1		0.4	11.0		2 3/4"AVE 0.8					
RAMP H														
112+18.63 – 112+68.72	16	50.09	89.0	8.9		3.1	88.9		2 3/4"AVE 6.8					
EXTRA AREA FOR RADI	VAR		14	1.4		0.5	14.0		2 3/4"AVE 1.1					
112+68.72 – 123+08.53	16	1039.81	1848.6	184.9	1848.6	64.2	1848.6		192.6					
123+08.53 – 124.08.53	15 AVE	100.0	166.7	16.7	166.7	5.8	166.7		17.4					
124+08.53 – 125+08.53	15 AVE	100.0	166.7	16.7	166.7	5.8	166.7		17.4					
125+08.53 – 127+75.21	16.5 AVE	266.68	488.9	48.9	488.9	17.0	488.9		50.9					
EASTBOUND														
127+75.21 – 130+11.63	12	236.42	315.2	31.5	315.2	10.9	315.2		32.8					
130+11.63 – 133+11.63	6 AVE	300.0	200.0	20.0	200.0	6.9	200.0		20.8					
RAMP H-H														
2+10 – 2+60	16	50.0	88.9	8.9		3.1	88.9		2 3/4"AVE 6.8					
2+60 – 4+10	16	150.0	266.7	26.7	266.7	9.3	266.7		27.8					
4+10 – 4+65	8 AVE	55.0	48.9	4.9	48.9	1.7	48.9		5.1					
LINE "A"														
*267+72.36 – 270+86.55	18 AVE	314.19	628.4	62.8	628.4	21.8	628.4		65.5					
*270+86.55 – 271+86.55	18 AVE	100.0	200.0	20.0	200.0	6.9	200.0		20.8					
*271+86.55 – 274+49	16	262.45	466.6	46.7	466.6	16.2	466.6		48.6					
*274+49 – 275+24	16	75.0	133.3	13.3		AVE.4.6	133.3		3⅛" AVE 11.5					
*275+24 – 279+36	16	412.0	732.4	73.2		25.4	732.4		2½" 50.9					
*279+36 – 280+11	16	75.0	133.3	13.3		AVE.4.6	133.3		3⅛" 11.5					
*280+11 – 280+95.12	15 AVE	84.12	140.2	14.0	140.2	4.9	140.2		14.6					
*280+95.12 – 281+95.12	15 AVE	100.0	166.7	16.7	166.7	5.8	166.7		17.4					
*281+95.12 – 283+55	16.5	159.88	293.1	29.3	293.1	10.2	293.1		30.5					
*283+55 – 283+89.68 B	12	34.68	46.2	4.6	46.2	1.6	46.2		4.8					
STATE & FEDERAL				605.1	5757.9	210.1	6049.6		622.1					
CITY, STATE & FEDERAL				293.9	1941.2	102.0	2940.2		276.1					
TOTALS (CARRIED TO SHEET 61)														

PAVEMENT DATA TABLE

* CITY PARTICIPATION

** SEE STD. DRWG. BP-5

PAVEMENT DATA

STATION TO STATION	W.P. FEET	LENGTH LIN. FEET	PAVEMENT AREA SQ. YD.	407 TACK COAT GAL.	SPECIAL CRACKING AND SEATING EXISTING 451 RIGID PAVEMENT SQ.YD.	446 ASPH.CONC. SURFACE COURSE, TYPE 1 AC-20 1 1/4" CU.YD.		254 PAVEMENT PLANING BITUMINOUS SQ.YD.	304 AGGREGATE BASE 6" CU.YD.	301 BITUMINOUS AGGREGATE BASE 3 3/4" OR AS SHOWN CU.YD.	202 Pavement Removed (Including Asphalt Surface) SQ.YD.	203 EXCAVATION CU.YD.	203 SUBGRADE COMPACTION SQ.YD.	408 BIT. PRIME COAT GAL.	202 WEARING COURSE REMOVED SQ.YD.
WESTBOUND															
66+50 – 67+00	24	50.0	133.3	13.3		4.6		133.3		3"AVE. 11.1					
67+00 – 83+69.47	24	1669.47	4451.9	445.2	4451.9	154.6		4451.9		463.7					
83+69.47 – 85+69.47	24	200.0	533.3			18.5			88.9	8 3/4"129.6	533.3	66.7	533.3	213.3	
85+69.47 – 89+09.47	24	340.0	906.7			31.5			151.1	8 3/4"220.4	906.7	176.3	906.7	362.7	
89+09.47 – 91+09.47	24	200.0	533.3			18.5			88.9	8 3/4"129.6	533.3	66.7	533.3	213.3	
91+09.47 – 107+84.33	24	1674.86	4466.3	446.6	4466.3	155.1		4466.3		465.2					
107+84.33 – 109+84.33	24	200.0	533.3			18.5			88.9	8 3/4"129.6	533.3	66.7	533.3	213.3	
109+84.33 – 113+24.33	24	340.0	906.7			31.5			151.1	8 3/4"220.4	906.7	176.3	906.7	362.7	
113+24.33 – 115+24.33	24	200.0	533.3			18.5			88.9	8 3/4"129.6	533.3	66.7	533.3	213.3	
115+24.33 – 162+89.75	24	4765.42	12707.8	1270.8	12707.8	441.2		12707.8		1323.7					
162+89.75 – 164+14.75	24	125.0	333.3	6.7		12.4			44.2	8 3/4"64.4	265.1	28.5	265.1	106.0	66.7
164+14.75 – 165+90.35	BRIDGE LIMITS FOR DETAILS SEE SHEETS 90-115														
165+90.35 – 167+15.35	24	125.0	333.3	6.7		12.4			44.2	8 3/4"64.4	265.1	28.5	265.1	106.0	66.7
167+15.35 – 179+98.73	24	1283.38	3422.3	342.2	3422.3	118.8		3422.3		356.5					
179+98.73 – 181+23.73	24	125.0	333.3	6.7		12.4			44.2	8 3/4"64.4	265.1	28.5	265.1	106.0	66.7
181+23.73 – 183+03.66	BRIDGE LIMITS FOR DETAILS SEE SHEETS 90-115														
183+03.66 – 184+28.66	24	125.0	333.3	6.7		12.4			44.2	8 3/4"64.4	265.1	28.5	265.1	106.0	66.7
184+28.66 – 219+00	24	3471.34	9256.9	925.7	9256.9	321.4		9256.9		964.3					
219+00 – 235+35	FULL DEPTH REPLACEMENT FOR QUANTITIES AND DETAILS SEE SHEETS 36-50 & 60														
235+35 – 259+77.84	24	2442.84	6514.2	651.4	6514.2	226.2		6514.2		678.6					
*259+77.84 – 259+95.70	24	17.86	47.6	4.8	47.6	1.7		47.6		5.0					
LINE W															
*259+95.70 – 275+66.09	24	1570.39	4187.7	418.8	4187.7	145.4		4187.7		436.2					
*275+66.09 – 276+91.09	24	125.0	333.3	6.7		12.4			44.2	8 3/4"64.4	265.1	28.5	265.1	106.0	66.7
276+91.09 – 278+74.90	BRIDGE LIMITS FOR DETAILS SEE SHEETS 90-115 STATIONS ARE FROM LINE "W")														
*278+74.90 – 279+99.90	24	125.0	333.3	6.7		12.4			44.2	8 3/4"64.4	265.1	28.5	265.1	106.0	66.7
*279+99.90 – 283+89.68B	24	389.78	1039.4	103.9	1039.4	36.1		1039.4		108.3					
*10+00 A – 12+73	24	273.0	728.0	72.8	728.0	25.3		728.0		75.8					
*12+73 – 14+23	36	150.0	600.0	60.0		AVE 20.8				1 7/8"AVE. 31.3	** 20.0				
WESTBOUND															
69+00 – 72+00	6 AVE	300.0	200.0	20.0	200.0	6.9		200.0		20.8					
72+00 – 75+14.94	12	314.94	419.9	42.0	419.9	14.6		419.9		43.7					
RAMP A															
75+14.94 – 77+00	16.5	185.06	339.3	33.9	339.3	11.8		339.3		35.3					
77+00 – 78+00	15 AVE	100.0	166.7	16.7	166.7	5.8		166.7		17.4					
78+00 – 79+00	15 AVE	100.0	166.7	16.7	166.7	5.8		166.7		17.4					
79+00 – 82+25	16	325.0	577.8	57.8	577.8	20.0		577.8		60.2					
82+25 – 84+51.5	17	226.5	427.8	42.8	427.8	14.8		427.8		44.6					
RAMP A – B															
84+51.50 – 90+70	34	618.5	2336.6	233.7	2061.7	81.1		2336.6		243.4					
90+70 – 91+03.63	37	33.63	138.3	13.8		4.8		138.3		2 3/4 AVE 10.6					
EXTRA FOR RADI			81	8.1		2.8		81.0		2 3/4 AVE 6.2					
RAMP B – B															
87+86.51 – 89+26.61	11 AVE	140.1	171.2	17.1	171.2	5.9		171.2		17.8					
89+26.61 – 91+25	16 AVE	198.39	352.7	35.3	352.7	12.2		352.7		36.7					
91+25 – 91+48.25	14	23.25	36.2	3.6		1.3		36.2		2 3/4"AVE 2.8					
91+48.25 – 92+37.15	9 AVE	88.9	88.9	8.9		3.1		88.9		2 3/4"AVE 6.8					
STATE & FEDERAL				4672.4	45,703.2	1799.5		46455.8	834.6	6043.6	5007.0	733.4	5007.0	2002.6	266.8
CITY, STATE & FEDERAL				673.7	6002.7	254.1		6002.7	88.4	785.4	550.2	57.0	530.2	212.0	133.4
TOTALS (CARRIED TO SHEET 61)															

*CITY PARTICIPATION

PAVEMENT DATA

STATION TO STATION	W.P. FEET	LENGTH LIN. FEET	PAVEMENT AREA SQ. YD.	407 TACK COAT GAL.	SPECIAL CRACKING AND SEATING EXISTING 451 RIGID PAVEMENT SQ.YD.	446 ASPH.CONC. SURFACE COURSE, TYPE 1 AC-20 1 1/4" CU.YD.		254 PAVEMENT PLANING BITUMINOUS SQ.YD.	304 AGGREGATE BASE 6" CU.YD.	301 BITUMINOUS AGGREGATE BASE 3 3/4" OR AS SHOWN CU.YD.	202 Pavement Removed (Including Asphalt Surface) SQ.YD.	203 EXCAVATION CU.YD.	203 SUBGRADE COMPACTION SQ.YD.	408 BIT. PRIME COAT GAL.	202 WEARING COURSE REMOVED SQ.YD.
RAMP B															
78+41.17 – 79+54	17	112.83	213.1	21.3	188.1	7.4		213.1		22.2					
79+54 – 80+04	17.5 AVE	50.0	97.2	9.7	97.2	3.4		97.2		10.1					
80+04 – 83+45	16	341.0	606.2	60.6	606.2	21.0		606.2		63.1					
83+45 – 83+69.47	16.25 AVE	24.47	44.2	4.4	44.2	1.5		44.2		4.6					
83+69.47 – 84+45	17.25 AVE.	75.53	144.8			5.0			24.1	35.2	144.8	18.1	144.8	57.9	
84+45 – 85+69.47	26.75 AVE	124.47	370.0			12.8			61.7	89.9	370.0	46.3	370.0	148.0	
85+69.47 – 87+00	15.25 AVE	130.53	221.2			7.7			36.9	53.8	221.2	43.0	221.2	88.5	
WESTBOUND															
83+42.27 – 83+69.47	8	27.2	24.2	2.4	24.2	0.8		24.2		2.5					
83+69.47 – 84+42.27	9 AVE	72.8	72.8			2.5			12.1	17.7	72.8	9.1	72.8	29.1	
S.R. 16															
747+29.81 – 749+76.47	BRIDGE LIMITS FOR DETAILS SEE SHEETS 90-115														
749+76.47 – 750+26.47	24	50.0	133.3	13.3		2 3/4" AVE 10.2		133.3							
750+26.47 – 753+90	24	363.53	969.4	97.1		33.7		971.0		2 1/2" 67.3					
753+90 – 754+65	24	75.0	200.0	20.0		5/8" AVE 3.5									
FEATHER FOR T.R. 131			97	9.7		3.4									
WESTBOUND															
87+00 – 89+42.27	12	242.27	323.0			11.2			53.8	78.5	323.0	62.8	323.0	129.2	
89+42.27 – 90+42.27	6 AVE	100.0	66.7			2.3			11.1	16.2	66.7	8.3	66.7	26.7	
98+01.10 – 101+01.10	6 AVE	300.0	200.0	20.0	200.0	6.9		200.0		20.8					
101+01.10 – 104+40	12	338.9	451.9	45.2	451.9	15.7		451.9		47.1					
RAMP E															
104+40 – 105+99.88	16.5 AVE	159.88	293.1	29.3	293.1	10.2		293.1		30.5					
105+99.88 – 106+99.88	15 AVE	100.0	166.7	16.7	166.7	5.8		166.7		17.4					
106+99.88 – 107+99.88	15 AVE	100.0	166.7	16.7	166.7	5.8		166.7		17.4					
107+99.88 – 110+70.13	16	270.25	480.4	48.0	480.4	16.7		480.4		50.0					
110+70.13 – 111+20.13	16	50.0	88.9	8.9		3.1		88.9		2 3/4"AVE 6.8					
EXTRA AREA FOR RADI			131	13.1		4.5		131.0		2 3/4"AVE 10.0					
RAMP F															
EXTRA AREA FOR RADI			98	9.8		3.4		98.0		2 3/4"AVE 7.5					
110+86.32 – 111+36.32	16	50.0	88.9	8.9		3.1		88.9		2 3/4"AVE 6.8					
111+36.32 – 117+45	16	608.68	1082.1	108.2	1082.1	37.6		1082.1		112.7					
117+45 – 118+45	17 AVE	100.0	188.9	18.9	188.9	6.6		188.9		19.7					
118+45 – 121+00	23.5 AVE	255.0	665.8	66.6	665.8	23.1		665.8		69.4					
WESTBOUND															
121+00 – 123+45	12	245.0	326.7	32.7	326.7	11.3		326.7		34.0					
123+45 – 124+45	6 AVE	100.0	66.7	6.7	66.7	2.3		66.7		6.9					
117+42.28 – 118+42.28	9 AVE	100.0	100.0	10.0	100 0	3.5		100.0		10.4					
CRANVILLE RD. LINE A-B															
*263+00 263+75	24	75.0	200.0	20.0		6.9		200.0		2 3/4"AVE 15.3					
*263+75 267+72.36	24	397.36	1059.6	106.0	1059.6	36.8		1059.6		110.4					
*267+72.36 – 270+00.36	12	228.0	304.0	30.4	304.0	10.6		304.0		31.7					
LINE B															
*270+86.63 – 271+74.11	13 AVE	87.48	126.4	12.6	126.4	4.4		126.4		13.2					
*271+74.11 – 273+14.11	15 AVE	140.0	233.3	23.3	233.3	8.1		233.3		24.3					
STATE & FEDERAL				698.2	5148.9	286.0		6685.0	199.7	928.5	1198.5	187.6	1198.5	479.4	
CITY, STATE & FEDERAL				192.3	1723.3	66.8		1923.3		194.9					
TOTALS (CARRIED TO SHEET 61)															

PAVEMENT DATA TABLE

CALC. BY ___ DATE 6-2-89
CHKD. BY ___ DATE 6-8-89

LIC-37-15.61
LIC-16-14.26

OHIO
FHWA REGION 5

* CITY PARTICIPATION

PAVEMENT DATA

STATION TO STATION (Westbound Lanes)	W.P. FEET	LENGTH LIN. FEET	PAVEMENT AREA SQ. YD.	407 TACK COAT GAL.	SPECIAL CRACKING AND SEATING EXISTING 451 RIGID PAVEMENT SQ.YD.	446 ASPH.CONC. SURFACE COURSE, TYPE 1 AC-20 1 1/4" CU.YD.		254 PAVEMENT PLANING BITUMINOUS SQ.YD.	304 AGGREGATE BASE 6" CU.YD.	301 BITUMINOUS AGGREGATE BASE 3 3/4" CU.YD.	202 Pavement Removed (Including Asphalt Surface) SQ.YD.	203 EXCAVATION CU.YD.	203 SUBGRADE COMPACTION SQ.YD.	408	202
*273+14.11 – 281+97.31	16	883.2	1570.1	157.0	1570.1	54.5		1570.1		163.6					
*281+97.31 – 282+97.31	17AVE	100.0	188.9	18.9	188.9	6.6		188.9		19.7					
*282+97.31 – 283+89.68B	23.5	302.69	790.4	79.0	790.4	27.4		790.4		82.3					
*10+00A – 12+10.32															
*12+10.32 – 12+73	12	62.68	83.6	8.4	83.6	2.9		83.6		8.7					
*HOWELL DRIVE	20	50	111.1	11.1		1 1/4AVE.3.9									
*EXTRA AREA FOR RADI			124	12.4		1 1/4AVE.4.3									
*CROSS OVER AT HOWELL DR.	20	63.88	142.0	14.2		2 1/2 9.9									
*EXTRA AREA FOR RADI			96	9.6		2 1/2 6.7									
CITY, STATE & FEDERAL TOTALS (CARRIED TO SHEET 61)				310.6	2633.0	116.2		2633.0		274.3					

PAVEMENT DATA

STATION TO STATION (Westbound Lanes)	W.P. FEET	LENGTH LIN. FEET	PAVEMENT AREA SQ. YD.			846 ASPH.CONC. SURFACE COURSE, TYPE 1 AC-20 1 1/4" CU.YD.	446 ASPH.CONC. INTERMEDIATE COURSE, TYPE 2 AC-20 1 3/4 CU.YD.		304 AGGREGATE BASE 4" CU.YD.	301 BITUMINOUS AGGREGATE BASE 11 1/2" CU.YD.	202 Pavement Removed (Including Asphalt Surface) SQ.YD.	203 EXCAVATION CU.YD.	203 SUBGRADE COMPACTION SQ.YD.		

PAVEMENT DATA TABLE

SHOULDER DATA TABLE

*CITY PARTICIPATION

★ For Sta. 138+30 to Sta. 143+10 See Sheet 30

CALC. BY D.M. DATE 1-3-87
CHKD. BY L.W.S. DATE 1-18-87

LIC-37-15.61
LIC-16-14.26

OHIO
FHWA REGION 5

55/123

SHOULDER DATA

STATION TO STATION (EASTBOUND)	EXISTING LT. SIDE W.B. FEET	EXISTING LT. SIDE LIN. FEET	EXISTING RT. SIDE W.B. FEET	EXISTING RT. SIDE LIN. FEET	AREA SQ. YDS.	407 TACK COAT GAL.	254 PAV'T. PLANING BITUMINOUS SQ.YD.	446 ASPH.CONC SURFACE COURSE, TYPE 1 AC-20 1 1/4" CU.YD.		617 COMPACTED AGGREGATE TYPE A (4" THICK.) WIDTH CU.YD.	301 BITUMINOUS AGGREGATE BASE 3 3/4" CU.YD.	304 AGGREGATE BASE 6" CU.YD.	203 EXCAVATION CU.YD.	203 SUBGRADE COMPACTION SQ.YD.	408 BIT. PRIME COAT GAL.
66+50 – 67+00	4	50.0			22.2	2.2	22.2	0.8		3.1	3" AVE. 1.8				
★ 67+00 – 138+30	4	7130.0			3168.9	316.9	3168.9	110.0		440.1	330.1				
143+10 – 162+74.55	4	1964.55			873.1	87.3	873.1	30.3		121.3	90.9				
162+77.55 – 164+02.55	4	125.0			55.6			1.9		7.7	8 3/4" 13.5	9.3	23.7	55.6	22.2
164+02.55 – 165+76.99		BRIDGE LIMITS FOR DETAILS SEE SHEETS 90-115													
165+76.99 – 167+01.99	4	125.0			55.6			1.9		7.7	8 3/4" 13.5	9.3	23.7	55.6	22.2
167+01.99 – 180+53.21	4	1351.22			600.5	60.0	600.5	20.9		83.4	62.6				
180+53.21 – 181+78.21	4	125.0			55.6			1.9		7.7	8 3/4" 13.5	9.3	23.7	55.6	22.2
181+78.21 – 183+60.38		BRIDGE LIMITS FOR DETAILS SEE SHEETS 90-115													
183+60.38 – 184+85.38	4	125.0			55.6			1.9		7.7	8 3/4" 13.5	9.3	23.7	55.6	22.2
184+85.38 – 219+00	4	3414.62			1517.6	151.8	1517.6	52.7		210.8	158.1				
219+00 – 235+35		FULL DEPTH REPLACEMENT FOR QUANTITIES AND DETAILS SEE SHEETS 36-50 & 60													
235+35 – 259+77.84	4	2442.84			1085.7	108.6	1085.7	37.7		150.8	113.1				
*259+77.84 – 280+93	4	2115.16			940.1	94.0	940.1	32.6		130.6	97.9				
*280+93 – 281+93.9	13.5Ave.	100.9			151.4	15.1	151.4	5.3			15.8				
LINE A															
*267+72.36 – 274+49			4	676.64	300.7	30.1	300.7	10.4		41.8	31.3				
*274+49 – 275+24			4	75.0	33.3	3.3	33.3	1.2		4.6	3 1/8" Ave. 2.9				
*275+24 – 279+36			4	412.0	183.1	18.3	183.1	6.4		25.4	2 1/2" 12.7				
*279+36 – 280+11			4	75.0	33.3	3.3	33.3	1.2		4.6	3 1/8" Ave. 2.9				
*280+11 – 280+95.12			3 AVE.	84.12	28.0	2.8	28.0	1.0		5.2	2.9				
*272+25 – 273+52.80	3	127.8			42.6	4.3	42.6	1.5		7.9	4.4				
*274+49.0 – 275+24	3	75.0			25.0	2.5	25.0	0.9		4.6	3 1/8" Ave. 2.2				
*275+24 – 279+36	3	412.0			137.3	13.7	137.3	4.8		25.4	2 1/2" 9.5				
*279+36 – 280+11	3	75.0			25.0	2.5	25.0	0.9		4.6	3 1/8" Ave. 2.2				
*280+11 – 280+95.12	3	84.12			28.0	2.8	28.0	1.0		5.2	2.9				
*280+95.12 – 281+95.12	3.5Ave.	100.0			38.9	3.9	38.9	1.4		6.2	4.1				
*281+95.12 – 283+89.68	4	194.56			86.5	8.7	86.5	3.0		12.0	9.0				
*10+00 – 10+50	4	50.0			22.2	2.2	22.2	0.8		3.1	2.3				
*10+50 – 12+00	4	150.0			66.7	6.7		5/8" Ave. 1.2		9.3	1 7/8" Ave. 3.5				
EASTBOUND															
66+50 – 67+00			8	50.0	44.4	4.4	44.4	1.5		3.1	3" Ave. 3.7				
67+00 – 73+73.37			8	673.37	598.6	59.9	598.6	20.8		41.6	62.3				
RAMP C															
73+73.37 – 78+35.18			5.5Ave.	461.81	282.2	28.2	282.2	9.8		28.5	29.4				
78+35.18 – 85+92.91			3	757.73	252.6	25.3	252.6	8.8		46.8	26.3				
85+92.91 – 86+42.91			3	60.0	20.0	2.0	20.0	0.7		3.7	3 5/8" Ave. 2.0				
77+35.18 – 77+75	8Ave.	39.82			35.4	3.5	35.4	1.2			3.7				
77+35.18 – 85+92.91	3	857.73			285.9	28.6	285.9	9.9		52.9	29.8				
85+92.91 – 86+42.91	3	54.0			18.0	1.8	18.0	0.6		3.3	3 5/8" Ave. 1.8				
EASTBOUND															
78+34.21 – 92+62			8	1427.79	1269.1	126.9	1269.1	44.1		88.1	132.2				
92+62 – 93+42.82			12 Ave.	80.82	107.8	10.8	107.8	3.7			11.2				
STATE & FEDERAL						1018.2	10,182.0	361.1		1308.3	1113.0	37.2	94.8	222.4	88.8
CITY, STATE & FEDERAL						214.2	2075.4	73.6		290.5	206.5				
TOTALS (CARRIED TO SHEET 61)															

SHOULDER DATA

STATION TO STATION	EXISTING LT. SIDE W.B. FEET	EXISTING LT. SIDE LIN. FEET	EXISTING RT. SIDE W.B. FEET	EXISTING RT. SIDE LIN. FEET	AREA SQ. YDS.	407 TACK COAT GAL.	254 PAV'T. PLANING BITUMINOUS SQ.YD.	446 ASPH.CONC SURFACE COURSE, TYPE 1 AC-20 1 1/4" CU.YD.		617 COMPACTED AGGREGATE TYPE A (4" THICK.) WIDTH CU.YD.	301 BITUMINOUS AGGREGATE BASE 3 3/4" CU.YD.	304 AGGREGATE BASE 6" CU.YD.	203 EXCAVATION CU.YD.	203 SUBGRADE COMPACTION SQ.YD.	408 BIT. PRIME COAT GAL.
S.R.16															
741+54 – 742+29	4	75.0			33.3	3.3	33.3	5/8" 0.6		4.6					
742+29 – 744+96.03	4	267.03			118.7	11.9	118.7	4.1		16.5	2 1/2" 8.2				
745+67.75 – 746+79.81	4	112.06			49.8	5.0	49.8	1.7		6.9	2 1/2" 3.5				
746+79.81 – 747+29.81	4	50.0			22.2	2.2	22.2	2 3/4" Ave. 1.7		3.1					
744+28.35 – 745+39.90			4	111.55	49.6	5.0	49.6	1.7		6.9	2 1/2" 3.4				
745+72.20 – 746+79.81			4	107.61	47.8	4.8	47.8	1.7		6.6	2 1/2" 3.3				
746+79.81 – 747+29.81			4	50.0	22.2	2.2	22.2	2 3/4" Ave. 1.7		3.1					
RAMP D–D															
RT.SIDE			4	54	24.0	2.4	24.0	0.8		3.3	2 1/2" 1.7				
RAMP D															
85+33.69 – 86+54	3	120.31			40.1	4.0	40.1	1.4		7.4	2 1/2" 2.8				
RAMP D–D															
LT.SIDE	3	103			34.3	3.4	34.3	1.2		6.4	2 1/2" 2.4				
RAMP D															
87+00 – 87+75	3	75.0			25.0	2.5	25.0	0.9		4.6	3 1/8" Ave. 2.2				
87+75 – 91+44.04	3	369.04			123.0	12.3	123.0	4.3		22.9	12.8				
91+44.04 – 92+44.04	2.5Ave	100.0			27.8	2.8	27.8	1.0		6.2	2.9				
S.R.16															
741+54 – 742+29			4	75.0	33.3	3.3	33.3	1.2		4.6	2 1/2" 2.3				
RAMP D															
feather at Drive Rt.			27 Ave	15	45.0	4.5		1/2" Ave. 0.6							
83+55.71 – 85+75			4	219.29	97.5	9.8	97.5	3.4		13.5	2 1/2" 6.8				
85+75 – 86+25			3.5Ave.	50.0	19.4	1.9	19.4	0.7		3.1	2 1/2" 1.3				
86+25 – 87+00			3	75	25.0	2.5	25.0	0.9		4.6	2 1/2" 1.7				
87+00 – 87+75			3	75	25.0	2.5	25.0	0.9		4.6	3 1/8" Ave. 2.2				
87+75 – 91+44.0			3	369.0	123.0	12.3	123.0	4.3		22.8	12.8				
91+44.04 – 95+08.92			5.5Ave.	364.88	223.0	22.3	223.0	7.7		22.5	23.2				
EASTBOUND															
95+08.92 – 100+70			8	561.08	498.7	49.9	498.7	17.3		34.6	51.9				
RAMP G															
100+70 – 104+64.93			5.5Ave.	394.93	241.3	24.1	241.3	8.4		24.4	25.1				
104+64.93 – 111+94.6			3	729.67	243.2	24.3	243.2	8.4		45.0	25.3				
111+94.6 – 112+44.6			3	60	20.0	2.0	20.0	0.7		3.7	2 3/4" Ave. 1.5				
103+64.93 – 104+00	8 Ave.	35.07			31.2	3.1	31.2	1.1			3.2				
103+64.93 – 111+94.6	3	829.67			276.6	27.7	276.6	9.6		51.2	28.8				
111+94.6 – 112+44.6	3	55			18.3	1.8	18.3	0.6		3.4	2 3/4" Ave. 1.4				
EASTBOUND															
104+67.28 – 123+42			8	1874.72	1666.4	166.6	1666.4	57.9		115.7	173.6				
123+42 – 125+11.63			13Ave.	169.63	245.0	24.5	245.0	8.5			25.5				
RAMP H															
112+18.22 – 112+68.22	3	35			11.7	1.1	11.7	0.4		2.1	2 3/4" Ave. 0.9				
112+68.22 – 123+08.53	3	1040.31			346.8	34.7	346.8	12.0		64.2	36.1				
123+08.53 – 124+08.53	2.5 Ave.	100.0			27.8	2.8	27.8	1.0			2.9				
112+18.22 – 112+68.22			3	73	24.3	2.4	24.3	0.8		4.5	2 3/4" Ave. 1.9				
112+68.22 – 113+68.22			3	100.0	33.3	3.3	33.3	1.2		6.2	3.5				
RAMP H–H															
2+10 – 2+60	3	50.0			16.7	1.7	16.7	0.6		3.1	2 3/4" Ave. 1.3				
2+60 – 4+10	3	150.0			50.0	5.0	50.0	1.7		9.3	5.2				
2+10 – 2+60			3	50.0	16.7	1.7	16.7	0.6		3.1	2 3/4" Ave. 1.3				
2+60 – 4+65			3	205.0	68.3	6.8	68.3	2.4		12.7	7.1				
STATE & FEDERAL						504.4	5000.3	175.7		557.4	490.0				
TOTALS (CARRIED TO SHEET 61)															

SHOULDER DATA TABLE

CALC. BY
DATE
CHKD. BY
DATE

LIC-37-15.61
LIC-16-14.26

OHIO
FHWA REGION 5

*CITY PARTICIPATION

★ For Sta. 138+50 to Sta. 143+30 See Sheet 30

SHOULDER DATA

STATION TO STATION ℄ SURVEY	EXISTING LT. SIDE W.B. FEET	EXISTING LT. SIDE LIN. FEET	EXISTING RT. SIDE W.B. FEET	EXISTING RT. SIDE LIN. FEET	AREA SQ. YDS.	407 TACK COAT GAL.	254 PAVEMENT PLANING BITUMINOUS SQ.YD.	446 ASPH.CONC SURFACE COURSE, TYPE 1 AC-20 1 1/4" CU.YD.	617 COMPACTED AGGREGATE TYPE A (4" THICK.) CU.YD.	301 BITUMINOUS AGGREGATE BASE 3 3/4" OR AS SHOWN CU.YD.	304 AGGREGATE BASE 6" CU.YD.	203 EXCAVATION CU.YD.	203 SUBGRADE COMPACTION SQ.YD.	408 BIT. PRIME COAT GAL.
RAMP H														
114+32 – 123+08.53			3	876.53	292.2	29.2	292.2	10.1	54.1	30.4				
123+08.53 – 127+75.21			5.5AVE	466.68	285.2	28.5	285.2	9.9	28.8	29.7				
EASTBOUND														
127+75.21 – 138+50			8	1074.79	955.4	95.5	955.4	33.2	66.3	99.5				
★143+30 — 162+71.17			8	1941.17	1725.5	172.6	1725.5	59.9	119.8	179.7				
162+71.17 – 163+96.17			8	125.0	111.1			3.9	7.7	8 3/4"27.0	18.5	47.4	111.1	44.4
163+96.17 – 165+70.61		BRIDGE LIMITS FOR DETAILS SEE SHEETS 90-115												
165+70.61 – 166+95.61			8	125.0	111.1			3.9	7.7	8 3/4"27.0	18.5	47.4	111.1	44.4
166+95.61 – 180+80.16			8	1384.55	1230.7	123.1	1230.7	42.7	85.4	128.2				
180+80.16 – 182+05.16			8	125.0	111.1			3.9	7.7	8 3/4"27.0	18.5	47.4	111.1	44.4
182+05.16 – 183+87.33		BRIDGE LIMITS FOR DETAILS SEE SHEETS 90-115												
183+87.33 – 185+12.33			8	125.0	111.1			3.9	7.7	8 3/4"27.0	18.5	47.4	111.1	44.4
185+12.33 – 219+00			8	3387.67	3011.3	301.1	3011.3	104.6	209.1	313.7				
219+00 – 235+35		BRIDGE LIMITS FOR DETAILS SEE SHEETS 90-115												
235+35 – 259+77.84			8	2442.84	2171.4	217.1	2171.4	75.4	150.8	226.2				
* 259+77.84 – 283+89.68			8	2411.84	2143.9	214.4	2143.9	74.4	148.9	223.3				
* 10+00 – 10+50			8	50.0	44.4	4.4	44.4	1.5	3.1	4.6				
* 10+50 – 12+00			8	150.0	133.3	13.3		5/8AVE2.3	9.3	1 7/8AVE6.9				
STATE & FEDERAL						976.1	9671.1	351.4	745.1	1115.4	74.0	189.6	444.4	177.6
CITY, STATE, & FEDERAL						232.1	2188.3	78.2	161.3	234.8				
TOTALS (CARRIED TO SHEET 61)														

*CITY PARTICIPATION

SHOULDER DATA

STATION TO STATION	EXISTING LT. SIDE W.B. FEET	EXISTING LT. SIDE LIN. FEET	EXISTING RT. SIDE W.B. FEET	EXISTING RT. SIDE LIN. FEET	AREA SQ. YDS.	407 TACK COAT GAL.	254 PAVEMENT PLANING BITUMINOUS SQ.YD.	446 ASPH.CONC SURFACE COURSE, TYPE 1 AC-20 1 1/4" CU.YD.		617 COMPACTED AGGREGATE TYPE A (4" THICK.) CU.YD.	301 BITUMINOUS AGGREGATE BASE 3 3/4" OR AS SHOWN CU.YD.	304 AGGREGATE BASE 6" CU.YD.	203 EXCAVATION CU.YD.	203 SUBGRADE COMPACTION SQ.YD.	408 BIT. PRIME COAT GAL.

SHOULDER DATA TABLE

CALC. BY / DATE	CHKD. BY d.w.c / DATE [illegible]	LIC-37-15.61 LIC-16-14.26	OHIO	FHWA REGION 5	57/123

*CITY PARTICIPATION ★ For Sta. 141+75 to Sta. 146+50 See Sheet 30

SHOULDER DATA

STATION TO STATION ℄ SURVEY	EXISTING LT. SIDE W.B. FEET	EXISTING LT. SIDE LIN. FEET	EXISTING RT. SIDE W.B. FEET	EXISTING RT. SIDE LIN. FEET	AREA SQ. YDS.	407 TACK COAT GAL'S	254 PAVEMENT PLANING BITUMINOUS SQ.YD.	446 ASPH.CONC. SURFACE COURSE, TYPE 1 AC-20 1 1/4" CU.YD.	617 COMPACTED AGGREGATE TYPE A (4" THICK.) CU.YD.	301 BITUMINOUS AGGREGATE BASE 3 3/4" OR AS SHOWN CU.YD.	304 AGGREGATE BASE 6" CU.YD.	203 EXCAVATION CU.YD.	203 SUBGRADE COMPACTION SQ.YD.	408 BIT. PRIME COAT GAL.
WESTBOUND														
66+50 – 67+00			4	50.0	22.2	2.2	22.2	0.8	3.1	3"AVE 1.8				
67+00 – 83+69.47			4	1669.47	742.0	74.2	742.0	25.8	103.1	77.3				
83+69.47 – 85+69.47			4	200.0	88.9			3.1	12.3	8 3/4" 21.6	14.8	33.3	88.9	35.6
85+69.47 – 89+09.47			4	340.0	151.1			5.2	21.0	8 3/4" 36.7	25.2	67.2	151.1	60.4
89+09.47 – 91+09.47			4	200.0	88.9			3.1	12.3	8 3/4" 21.6	14.8	33.3	88.9	35.6
91+09.47 – 107+84.33			4	1674.86	744.4	74.4	744.4	25.8	103.4	77.5				
107+84.33 – 109+84.33			4	200.0	88.9			3.1	12.3	8 3/4" 21.6	14.8	33.3	88.9	35.6
109+84.33 – 113+24.33			4	340.0	151.1			5.2	21.0	8 3/4" 36.7	25.2	67.2	151.1	60.4
113+24.33 – 115+24.33			4	200.0	88.9			3.1	12.3	8 3/4" 21.6	14.8	33.3	88.9	35.6
★115+24.33 – 141+75			4	2650.67	1178.1	117.8	1178.1	40.9	163.6	122.7				
146+50 – 162+87.35			4	1637.35	727.7	72.8	727.7	25.3	101.1	75.8				
162+87.35 – 164+12.35			4	125.0	55.6			1.9	7.7	8 3/4" 13.5	9.3	23.7	55.6	22.2
164+12.35 – 165+86.79	BRIDGE LIMITS FOR DETAILS SEE SHEETS 90-115													
165+86.79 – 167+11.79			4	125.0	55.6			1.9	7.7	8 3/4" 13.5	9.3	23.7	55.6	22.2
167+11.79 – 180+11.89			4	1300.1	577.8	57.8	577.8	20.1	80.3	60.2				
180+11.89 – 181+36.89			4	125.0	55.6			1.9	7.7	8 3/4"13.5	9.3	23.7	55.6	22.2
181+36.89 – 183+15.66	BRIDGE LIMITS FOR DETAILS SEE SHEETS 90-115													
183+15.66 – 184+40.66			4	125.0	55.6			1.9	7.7	8 3/4" 13.5	9.3	23.7	55.6	22.2
184+40.66 – 219+00			4	3459.34	1537.5	153.8	1537.5	53.4	213.5	160.2				
219+00 – 235+35	FULL DEPTH REPLACEMENT FOR QUANTITIES AND DETAILS SEE SHEETS 36-50 & 60													
235+35 – 259+77.84			4	2442.84	1085.7	108.6	1085.7	37.7	150.8	113.1				
*259+77.84 – 259+95.70			4	17.86	7.9	0.8	7.9	0.3	1.1	0.8				
*259+95.70 – 275+66.09 SKEW			4	1570.39	698.0	69.8	698.0	24.2	96.9	72.7				
*275+66.09 – 276+91.09 SKEW			4	125.0	55.6			1.9	7.7	8 3/4"13.5	9.3	23.7	55.6	22.2
276+91.09 – 278+74.90 SKEW	BRIDGE LIMITS FOR DETAILS SEE SHEETS 90-115													
*278+74.90 – 279+99.90 SKEW			4	125.0	55.6			1.9	7.7	8 3/4" 13.5	9.3	23.7	55.6	22.2
*279+99.90 – 283+89.68 B SKEW			4	389.78	173.2	17.3	173.2	6.0	24.1	18.0				
*10+00 A – 12+73			4	273.0	121.3	12.1		4.2	16.9	12.6				
*12+73 – 14+23			4	150.0	66.7	6.7		5/8 AVE. 1.2	9.3	1 7/8"AVE 3.5				
WESTBOUND														
66+50 – 67+00	8	50.0			44.4	4.4	44.4	1.5	3.1	3"AVE 3.7				
67+00 – 75+14.94	8	814.94			724.4	72.4	724.4	25.2	50.3	75.5				
RAMP A														
75+14.94 – 79+00.42	5.5 AVE	385.48			235.6	23.6	235.6	8.2	23.8	24.5				
79+00.42 – 84+51.5	3	551.08			183.7	18.4	183.7	6.4	34.0	19.1				
RAMP A B														
84+51.5 – 90+70	3	618.5			206.2	20.6	206.2	7.2	38.2	21.5				
90+70 – 91+03.63	3	61			20.3	2.0	20.3	0.7	3.8	2 3/4"AVE 1.6				
RAMP A														
78+00 – 79+00			2.5 AVE	100.0	27.8	2.8	27.8	1.0	6.2	2.9				
79+00 – 82+25			3	325.0	108.3	10.8	108.3	3.8	20.1	11.3				
RAMP B														
80+04 – 80+54			2.5 AVE	50.0	13.9	1.4	13.9	0.5	3.1	1.4				
80+54 – 83+69.47			3	315.47	105.2	10.5	105.2	3.7	19.5	11.0				
83+69.47 – 84+45			3	75.53	25.2			0.9	4.7	2.6	4.2	7.7	25.2	10.1
STATE & FEDERAL						828.5	8285.2	319.3	1247.7	1077.5	151.0	370.1	905.4	362.1
CITY, STATE & FEDERAL						106.7	879.1	39.7	163.7	134.6	18.6	47.4	111.2	44.4
SUBTOTAL (CARRIED TO SHEET 61)														

*CITY PARTICIPATION

SHOULDER DATA

STATION TO STATION	EXISTING LT. SIDE W.B. FEET	EXISTING LT. SIDE LIN. FEET	EXISTING RT. SIDE W.B. FEET	EXISTING RT. SIDE LIN. FEET	AREA SQ. YDS.	407 TACK COAT GAL'S	254 PAVEMENT PLANING BITUMINOUS SQ.YD.	446 ASPH.CONC. SURFACE COURSE, TYPE 1 AC-20 1 1/4" CU.YD.	617 COMPACTED AGGREGATE TYPE A (4" THICK.) CU.YD.	301 BITUMINOUS AGGREGATE BASE 3 3/4" OR AS SHOWN CU.YD.	304 AGGREGATE BASE 6" CU.YD.	203 EXCAVATION CU.YD.	203 SUBGRADE COMPACTION SQ.YD.	408 BIT. PRIME COAT GAL.
RAMP A-B														
84+51.5 – 87+86.51			3	335.01	111.7	11.2	111.7	3.9	20.7	11.6				
RAMP B B														
87+86.51 – 91+00			3	313.49	104.5	10.5	104.5	3.6	19.4	10.9				
91+00 – 91+25			3.5 AVE.	25.0	9.7	1.0	9.7	0.3	1.5	1.0				
91+25 – 92+37.15			4	112.15	49.8	5.0	49.8	1.7	6.9	2 3/4"AVE 3.8				
89+26.61 – 91+25	4	198.39			88.2	8.8	88.2	3.1	12.2	9.2				
91+25 – 91+48.25	4	23.25			10.3	1.0	10.3	0.4	1.4	2 3/4"AVE 0.8				
RAMP A B														
89+30 – 90+70			3	140.0	46.7	4.7	46.7	1.6	8.6	4.9				
90+70 – 91+03.63			3	44	14.7	1.5	14.7	0.5	2.7	2 3/4"AVE 1.1				
S.R. 16														
749+75.89 – 750+25.89 SKEW	4	50.0			22.2	2.2	22.2	2 3/4"AVE 1.7	3.1					
750+25.89 – 750+57.10 SKEW	4	31.21			13.9	1.4	13.9	0.5	1.9	2 1/2" 1.0				
751+50 – 752+74	4	124.0			55.1	5.5	55.1	1.9	7.7	2 1/2" 3.8				
753+90 – 754+65	4	75.0			33.3	3.3		5/8"AVE 0.6	4.6					
749+75.89 – 750+25.89 SKEW			4	50.0	22.2	2.2	22.2	2 3/4" AVE 1.7	3.1					
750+25.89 – 753+90			4	364.11	161.8	16.2	161.8	5.6	22.5	2 1/2" 11.2				
753+90 – 754+65			4	75.0	33.3	3.3		5/8 "AVE 0.6	4.6					
EXTRA FOR DRIVE RT.			58	11	70.9	7.1		1/2"AVE 1.0						
RAMP B														
78+41.17 – 83+69.47	3	528.3			176.1	17.6	176.1	6.1	32.6	18.3				
83+69.47 – 85+69.47	4.5 AVE	200.0			100.0			3.5	12.3	8 3/4"24.3	16.7	37.5	100.0	40.0
85+69.47 – 87+00	7.0 AVE	130.53			101.5			3.5	8.1	8 3/4" 24.7	16.9	45.1	101.5	40.6
87+00 – 89+09.47	8	209.47			186.2			6.5	12.9	8 3/4" 45.3	31.0	82.8	186.2	74.5
89+09.47 – 91+09.47	8	200.0			177.8			6.2	12.3	8 3/4" 43.2	29.6	66.7	177.8	71.1
91+09.47 – 104+40	8	1330.53			1182.7	118.3	1182.7	41.1	82.1	123.2				
WESTBOUND														
77+00 – 77+98	13 AVE	98.0			141.6	14.2	141.6	4.9	6.0	14.7				
77+98 – 83+42.27	8	544.27			483.8	48.4	483.8	16.8	33.6	50.4				
84+11 – 84+45	8 Ave.	34.0			30.2	3.0	30.2	1.0		3.1				
RAMP E														
104+40 – 107+82.72	5.5 AVE	342.72			209.4	20.9	209.4	7.3	21.2	21.8				
107+82.72 – 110+70.13	3	287.41			95.8	9.6	95.8	3.3	17.7	10.0				
110+70.13 – 111+20.13	3	97			32.3	3.2	32.3	1.1	6.0	2 3/4"AVE 2.5				
106+99.88 – 107+99.88			2.5 AVE	100.0	27.8	2.8	27.8	1.0	6.2	2.9				
107+99.88 – 110+70.13			3	270.25	90.1	9.0	90.1	3.1	16.7	9.4				
110+70.13 – 111+20.13			3	49	16.3	1.6	16.3	0.6	3.0	2 3/4"AVE 1.2				
WESTBOUND														
106+01.10 – 106+96	13 AVE	94.9			137.1	13.7	137.1	4.8	5.9	14.3				
106+96 – 107+84.33	8	88.33			78.5	7.9	78.5	2.7	5.5	8.2				
107+84.33 – 109+84.33	8	200.0			177.8			6.2	12.3	8 3/4" 43.2	29.6	66.7	177.8	71.1
118+10 – 118+42.28	8 Ave	32.28			28.7	2.9	28.7	1.0		3.0				
109+84.33 – 113+24.33	8	340.0			302.2			10.5	21.0	8 3/4" 73.5	50.4	134.3	302.2	120.9
113+24.33 – 115+24.33	8	200.0			177.8			6.2	12.3	8 3/4" 43.2	29.6	66.7	177.8	71.1
115+24.33 – 117+42.88	8	218.55			194.3	19.4	194.3	6.7	13.5	20.2				
RAMP F														
110+86.32 – 111+36.32			3	52	17.3	1.7	17.3	0.6	3.2	2 3/4"AVE 1.3				
111+36.32 – 118+45			3	708.68	236.2	23.6	236.2	8.2	43.7	24.6				
STATE & FEDERAL						402.7	3889.0	181.6	509.0	685.8	203.8	499.8	1223.3	489.3
SUBTOTAL (CARRIED TO SHEET 61)														

SHOULDER DATA TABLE

CALC. BY [illegible] DATE [illegible]
CHKD. BY [illegible] DATE [illegible]

LIC-37-15.61
LIC-16-14.26

OHIO
FHWA REGION 5

*CITY PARTICIPATION

★ For Sta. 141+55 to Sta. 142+75 See Sheet 30

SHOULDER DATA

STATION TO STATION	EXISTING LT. SIDE W.B. FEET	EXISTING LT. SIDE LIN. FEET	EXISTING RT. SIDE W.B. FEET	EXISTING RT. SIDE LIN. FEET	AREA SQ. YDS.	407 TACK COAT GAL'S	254 PAVEMENT PLANING BITUMINOUS SQ.YD.	446 ASPH.CONC. SURFACE COURSE, TYPE 1 AC-20 1 1/4" CU.YD.	617 COMPACTED AGGREGATE TYPE A (4" THICK.) CU.YD.	301 BITUMINOUS AGGREGATE BASE 3 3/4" OR AS SHOWN CU.YD.	304 AGGREGATE BASE 6" CU.YD.	203 EXCAVATION CU.YD.	203 SUBGRADE COMPACTION SQ.YD.	408 BIT. PRIME COAT GAL.
RAMP F														
110+86.32 – 111+36.32	3	50			16.7	1.7	16.7	0.6	3.1	2 3/4"AVE 1.3				
111+36.32 – 117+45	3	608.68			202.9	20.3	202.9	7.0	37.6	21.1				
117+45 – 121+00	5.5 AVE	355.0			216.9	21.7	216.9	7.5	21.9	22.6				
WESTBOUND														
121+00 – 141+55	8	2055.0			1826.7	182.7	1826.7	634	126.9	190.3				
★ 142+75 – 162+93.73	8	2018.73			1794.4	179.4	1794.4	62.3	124.6	186.9				
162+93.73 – 164+18.73	8	125.0			111.1			3.9	7.7	8 3/4" 27.0	18.5	47.4	111.1	44.4
164+18.73 – 165+93.17	BRIDGE LIMITS FOR DETAILS SEE SHEETS 90-115													
165+93.17 – 167+18.17	8	125.0			111.1			3.9	7.7	8 3/4" 27.0	18.5	47.4	111.1	44.4
167+18.17 – 179+84.94	8	1266.77			1126.0	112.6	1126.0	39.1	78.2	117.3				
179+84.94 – 181+09.94	8	125.0			111.1			3.9	7.7	8 3/4" 27.0	18.5	47.4	111.1	44.4
181+09.94 – 182+88.71	BRIDGE LIMITS FOR DETAILS SEE SHEETS 90-115													
182+88.71 – 184+13.71	8	125.0			111.1			3.9	7.7	8 3/4" 27.0	18.5	47.4	111.1	44.4
184+13.71 – 219+00	8	3486.29			3098.9	309.9	3098.9	107.6	215.2	322.8				
219+00 – 235+35	FULL DEPTH REPLACEMENT FOR QUANTITIES SEE SHEETS 36-50 & 60													
235+35 – 259+77.84	8	2442.84			2171.4	217.1	2171.4	75.4	150.8	226.2				
259+77.84 – 259+95.70	8	17.86			15.9	1.6	15.9	0.6	1.1	1.7				
LINE W														
*259+95.70 – 275+66.09 SKEW	8	1570.39			1395.9	139.6	1395.9	48.5	96.9	145.4				
*275+66.09 – 276+91.09 SKEW	8	125.0			111.1			3.9	7.7	8 3/4" 27.0	18.5	47.4	111.1	44.4
*276+91.09 – 278+74.90 SKEW	BRIDGE LIMITS FOR DETAILS SEE SHEETS 90-115													
*278+74.90 – 279+99.90 SKEW	8	125.0			111.1			3.9	7.7	8 3/4" 27.0	18.5	47.4	111.1	44.4
*279+99.90 – 281+93.80	8	193.9			172.4	17.2	172.4	6.0	12.0	18.0				
LINE B														
*271+74.11 – 273+14.11			14 AVE	140.0	217.8	21.8	217.8	7.6	8.6	22.7				
*273+14.11 – 274+50			3	135.89	45.3	4.5	45.3	1.6	8.4	4.7				
*275+15 – 282+03.48			3	688.48	229.5	23.0	229.5	8.0	42.5	23.9				
*282+03.48 – 282+97.31			2.5 AVE	93.83	26.1	2.6	26.1	0.9	5.8	2.7				
LINE A B														
*263+00 – 263+75	4	75.0	4	75.0	66.7	6.7	66.7	2.3	4.6	2 3/4"AVE 5.1				
*263+75 – 267+72.36	4	397.36	4	397.36	353.2	35.3	353.2	12.3	24.5	36.8				
LINE B														
*267+72.36 – 274+31.90	4	659.54			293.1	29.3	293.1	10.2	40.7	30.5				
*275+52.80 – 281+47.31	4	594.51			264.2	26.4	264.2	9.2	36.7	27.5				
*281+47.31 – 282+97.31	6 AVE	150.0			100.0	10.0	100.0	3.5	9.3	10.4				
*282+97.31 – 283+89.68 B	8	92.37			82.1	8.2	82.1	2.9	5.7	8.6				
*10+00 A – 12+73	8	273.0			242.7	24.3	242.7	8.4	16.9	25.3				
*12+73 – 14+23	8	150.0			133.3	13.3		5/8 AVE 2.3	9.3	1 7/8"AVE 6.9				
STATE & FEDERAL						1047.0	10469.8	379.1	790.2	1198.2	74.0	189.6	444.4	177.6
CITY, STATE & FEDERAL						362.2	3489.0	131.5	337.3	422.5	37.0	94.8	222.2	88.8
TOTALS (CARRIED TO SHEET 61)														

SHOULDER DATA

STATION TO STATION	EXISTING WIDTH DRIVE	EXISTING	EXISTING RT. SIDE SIDE	EXISTING RT. SIDE LIN. FEET	AREA SQ. YDS.	407 TACK COAT GAL'S	254 PAVEMENT PLANING BITUMINOUS SQ.YD.	446 ASPH.CONC. SURFACE COURSE, TYPE 1 AC-20 2 1/2" CU.YD.	617 COMPACTED AGGREGATE TYPE A (4" THICK.) CU.YD.	301 BITUMINOUS AGGREGATE BASE 3 3/4" OR AS SHOWN CU.YD.	304 AGGREGATE BASE 6" CU.YD.	203 EXCAVATION CU.YD.	203 SUBGRADE COMPACTION SQ.YD.	408 BIT. PRIME COAT GAL.
U-TURN MEDIAN OPENING														
*259+81					3194	12.8		22.2						
LINE A & A-B														
RESIDENCE	30		RT		115	11.5		1¼"4.0		6.0				
RESIDENCE	12		LT.		63	6.3		1¼"2.2		3.3				
COMMERCIAL	15		LT.		72	7.2		1¼"2.5		3.7				
FIELD	12		RT.		63						10.5			
FIELD	12		RT.		63						10.5			
CITY, STATE & FEDERAL						37.8		30.9		13.0	21			
SUBTOTAL (CARRIED TO SHEET 61)														

S.R.16 & T.R. 131

SHOULDER AND PAVEMENT DATA TABLE

CALC. BY [illegible] DATE [illegible]
CHKD. BY [illegible] DATE [illegible]

LIC-37-15.61
LIC-16-14.26

OHIO
FHWA REGION 5

STATION TO STATION	WIDTH FEET	LENGTH LIN. FEET	AREA SQ. YD.		407 TACK COAT GAL.	446 ASPH.CONC SURFACE COURSE, TYPE 1 AC-20 1 1/4" OR AS SHOWN CU.YD.	254 PAVEMENT PLANING BITUMINOUS SQ.YD.		SPECIAL CRACKING AND SEATING EXISTING 451 RIGID PAVEMENT SQ.YD.	301 BITUMINOUS AGGREGATE BASE 7 3/4" OR AS SHOWN CU.YD.	659 SEEDING AND MULCHING SQ.YD.	203 SUBGRADE COMPACTION SQ.YD.	617 COMPACTED AGGREGATE TYPE A 2" AVE. OR AS SHOWN CU.YD.	203 EXCAVATION CU.YD	EMBANKMENT AS PER PLAN CU.YD.
					PAVEMENT										
EASTBOUND															
RT. EDGE E.B. LANES															
138+50 – 141+00	6 AVE.	250.0	166.7			5.8				35.9		166.7			
141+00 – 142+18.5	12	118.5	158.0			5.5				34.0		158.0			
142+18.5 – 9+15	VAR.	VAR.	48			1.7				10.3		48			
APPROACH RT.	VAR.	VAR.	233		23.3	2 1/2" 16.2									
9+15 – 9+40	VAR.	25	69		6.9	1 1/4" AVE. 2.4									
* CROSSOVER	VAR.	VAR.	356		35.6	12.4	356		356	3 3/4" 37.1					
APPROACH LT.	VAR.	25	173		17.3	1 1/4" AVE. 6.0									
					SHOULDER										
138+50 – 139+33.33	6 AVE.	83.33	55.6			1.9				12.0		55.6			
139+33.33 – 141+00	4	166.97	74.2			2.6				16.0		74.2			
141+00 – 142+18.5	4	118.5	52.7			1.8				11.3		52.7			
142+18.5 – 9+15	4	92	40.9			1.4				8.8		40.9			
CROSSOVER	4	143	63.6		6.4	2.2	63.6			3 3/4" 6.6			4" 8.8		
* APPROACH RT.	1.5	120	20.0										1.1		
* APPROACH LT.	1.5	103	17.2										1.0		
SUB-TOTALS (CARRIED TO TABLE THIS SHEET)					89.5	59.9	419.6		356	172.0		596.1	10.9		
* FOR PLACEMENT OF ITEM 617 COMPACTED AGGREGATE SEE TYPICAL SECTION FOR S.R.16 SHEET 3															
CARRIED FROM SHEET 35											4494			1720	389
SUB-TOTALS RT. EDGE E.B. LANES					89.5	59.9	419.6		356	172.0		596.1	10.9		
SUB-TOTALS LT. EDGE E.B. LANES						17.7				109.4		508.3			
SUB-TOTALS RT. EDGE W.B. LANES						17.1				106.0		492.5			
TOTALS (CARRIED TO THE GENERAL SUMMARY)					89.5	94.7	419.6		356	387.4	4494	1596.9	10.9	1720	389

STATION TO STATION	WIDTH FEET	LENGTH LIN. FEET	AREA SQ. YD.			446 ASPH.CONC SURFACE COURSE, TYPE 1 AC-20 1 1/4" CU.YD.				301 BITUMINOUS AGGREGATE BASE 7 3/4" CU.YD.			203 SUBGRADE COMPACTION SQ.YD.	
						PAVEMENT								
EASTBOUND														
LT. EDGE E.B. LANES														
138+30 – 140+80	6 AVE.	250.0	166.7			5.8				35.9			166.7	
140+80 – 141+81	12	101.0	134.7			4.7				29.0			134.7	
141+81± – 142+21±	VAR.	VAR.	33			1.1				7.1			33	
						SHOULDER								
138+30 – 140+80	4	250.3	111.2			3.9				23.9			111.2	
140+80 – 142+21±	4	141.0	62.7			2.2				13.5			62.7	
SUB-TOTALS (CARRIED TO TABLE THIS SHEET)						17.7				109.4			508.3	
						PAVEMENT								
WESTBOUND														
RT. EDGE W.B. LANES														
142+71± – 143+00	VAR.	VAR.	24			0.8				5.2			24	
143+00 – 144+00	12	100.0	133.3			4.6				28.7			133.3	
144+00 – 146+50	6 AVE.	250.0	166.7			5.8				35.9			166.7	
						SHOULDER								
142+71± – 144+00	4	129.0	57.3			2.0				12.3			57.3	
144+00 – 146+50	4	250.3	111.2			3.9				23.9			111.2	
SUB-TOTALS (CARRIED TO TABLE THIS SHEET)						17.1				106.0			492.5	

SHOULDER AND PAVEMENT DATA TABLE

CALC. BY	DATE 12-3-86
CHKD. BY	DATE 12-8-86

LIC-37-15.61
LIC-16-14.26

OHIO
FHWA REGION 5

S.R. 16 & Cherry Valley Road

STATION TO STATION	AREA WIDTH FEET	AREA LENGTH FEET	PAVEMENT AREA SQ. YD.		452 12" PLAIN CONCRETE PAVEMENT AS PER PLAN SQ.YD.	452 15" PLAIN CONCRETE PAVEMENT AS PER PLAN SQ.YD.	304 AGGREGATE BASE CU.YD.	203 SUBGRADE COMPACTION SQ.YD.	617 COMPACTED AGGREGATE TYPE A 4" CU.YD.	202 PAVEMENT REMOVED SQ. YD.	659 SEEDING AND MULCHING SQ. YD.	203 EXCAVATION CU.YD.	203 EMBANKMENT AS PER PLAN CU.YD.
EASTBOUND				PAVEMENT DATA									
219+00 – 235+35	24	1635	4360			4360	726.7	4360		4360			
219+00 – 221+50	6 AVE.	250.3	166.7			166.7	27.8	166.7		127			
221+50 – 226+55.82	12	505.82	674.4			674.4	112.4	674.4					
222+50 – 225+00	6 AVE.	250.3	166.7			166.7	27.8	166.7					
225+00 – 226+07.68	12	107.68	143.6			143.6	23.9	143.6					
WESTBOUND													
219+00 – 235+35	24	1635	4360			4360	726.7	4360		4360			
227+13.99 – 228+13.99	12	100	133.3			133.3	22.2	133.3					
228+13.99 – 230+63.99	6 AVE.	250.0	166.7			166.7	27.8	166.7					
227+72.29 – 231+00	12	327.71	436.9			436.9	72.8	436.9					
231+00 – 233+50	6 AVE.	250.3	166.7			166.7	27.8	166.7					
CROSS-OVER													
225+94.65 – 227+86.59	VAR.	VAR.	656.9			656.9	109.5	656.9		420			
				SHOULDER DATA									
EASTBOUND													
219+00 – 226+07.68	4	707.98	314.7		314.7		59.0	314.7	43.7				
227+86.59 – 235+35	4	748.41	332.6		332.6		62.4	332.6	46.2				
219+00 – 219+83.3	6 AVE	83.3	55.6		55.6		10.0	55.6	5.1				
219+83.3 – 226+55.82	4	672.82	299.0		299.0		56.1	299.0	41.5				
228+32.15 – 235+35	8	702.85	624.8		624.8		110.6	624.8	43.4				
WESTBOUND													
219+00 – 225+94.65	4	694.65	308.7		308.7		57.9	308.7	42.9				
227+72.29 – 235+35	4	763.01	339.1		339.1		63.6	339.1	47.1				
219+00 – 225+85.81	8	685.81	609.6		609.6		108.0	609.6	42.3				
227+13.99 – 229+80.69	4	266.7	118.5		114.5	4.0	22.2	118.5	16.5	15" Item 452 9' x 4' ÷ 9 = 4.0 S.Y.			
229+80.69 – 230+63.99	6 AVE	83.33	55.6		55.6		10.0	55.6	5.1				
230+63.99 – 235+35	8	471.01	418.7		418.7		74.1	418.7	29.0				
CROSS-OVER													
225+94.65 – 227+86.59	4	108' x 2	96.0		96.0		18.0	96.0	13.3				
CARRIED FROM SHEET 45											9844	5289	701
CARRIED FROM SHEET 48											199	417	17
SUB TOTALS					3568.9	11435.9	2557.3	15,004.8	376.1	9267	10,043	5706	718
SUB TOTALS (From this sheet)					133.0	1323.6	243.0	1,456.5	3.2	616			
TOTALS (Carried to General Summary)					3,701.9	12,759.5	2800.3	16,461.3	379.3	9883	10043	5706	718

STATION TO STATION	AREA FEET	AREA FEET	PAVEMENT AREA SQ. YD.		452 12" PLAIN CONCRETE PAVEMENT AS PER PLAN SQ.YD.	452 15" PLAIN CONCRETE PAVEMENT AS PER PLAN SQ.YD.	304 AGGREGATE BASE CU.YD.	203 SUBGRADE COMPACTION SQ.YD.	617 COMPACTED AGGREGATE TYPE A 4" CU.YD.	202 PAVEMENT REMOVED SQ. YD.
						PAVEMENT DATA				
APPROACH LT.										
6+65.73 – 7+70.45										
	12	84.41	112.5							
	89.27	39.2	388.8							
65^2 x .0855 ÷ 9 =			40.14							
65^2 x .4844 ÷ 9 =			227.40							
TOTAL AREA			768.84			768.8	128.1	768.8		338
APPROACH RT.										
8+75.38 – 9+75										
	24	72.29	206.10							
	22.15	22.33	54.96							
	12	32.1	42.80							
50^2 x .0853 ÷ 9 =			23.69							
50^2 x .4854 ÷ 9 =			134.83							
TOTAL AREA			462.38			462.4	77.1	462.4		278
							SHOULDER DATA			
APPROACH LT.										
6+65.73 -228+32.15	4'	121.95	54.20		37.8	16.4	9.5	54.2		15" Item 452 4' x 37' ÷ 9 = 16.4 S.Y.
EXTRA FOR 8' BERM			6.48		5.4	1.1	1.0	6.5	1.7	15" Item 452 4' ÷ 2 x 5' ÷ 9 = 1.1 S.Y.
6+65.73 – 226+55.82	4	127.70	56.76		24.4	32.4	9.2	56.8		15" Item 452 72.9' x 4' ÷ 9 = 32.4 S.Y.
APPROACH RT.										
227+13.99 – 9+75	4	114.81	51.03		26.7	24.4	8.4	51.0		15" Item 452 54.81' x 4' ÷ 9 = 24.4 S.Y.
225+85.81 – 9+75	4	115.28	51.24		37.4	13.8	8.9	51.2		15" Item 452 31' x 4' ÷ 9 = 13.8 S.Y.
EXTRA FOR 8' BERM			5.61		1.3	4.3	0.8	5.6	1.5	12" Item 452 4' x 3' ÷ 9 = 1.3 S.Y.
SUB TOTALS (Carried to table this sheet)					133.0	1323.6	243.0	1,456.5	3.2	616

PAVEMENT AND SHOULDER SUB-SUMMARY

CALC. BY	DATE	CHKD. BY	DATE
Q.W.	1-3-87	J.W.C.	1-13-87

LIC-37-15.61
LIC-16-14.26

OHIO
FHWA REGION 5

PAVEMENT AND SHOULDER DATA

CARRIED FROM SHEET	407 TACK COAT GAL.	SPECIAL CRACKING AND SEATING EXISTING 451 RIGID PAVEMENT SQ.YD.	446 ASPH.CONC SURFACE COURSE, TYPE 1 AC-20 CU.YD.	617 COMPACTED AGGREGATE TYPE A WIDTH CU.YD.	254 PAVEMENT PLANING BITUMINOUS SQ.YD.	304 AGGREGATE BASE CU.YD.	301 BITUMINOUS AGGREGATE BASE CU.YD.	202 Pavement Removed (Including Asphalt Surface) SQ.YD.	203 EXCAVATION CU.YD.	203 SUBGRADE COMPACTION SQ.YD.	408 BIT. PRIME COAT GAL.	202 WEARING COURSE REMOVED SQ.YD
STATE & FEDERAL												
52 (PAVEMENT TABLE LT.)	5283.3	49,613.6	1880.8		52,531.7	176.8	5624.4	1060.4	114.0	1060.4	424.0	266.8
52 (PAVEMENT TABLE RT.)	605.1	5757.9	210.1		6049.6		622.1					
53 (PAVEMENT TABLE LT.)	4672.4	45,703.2	1799.5		46,455.8	834.6	6043.6	5007.0	733.4	5007.0	2002.6	266.8
53 (PAVEMENT TABLE RT.)	698.2	5148.9	286.0		6685.0	199.7	928.5	1198.5	187.6	1198.5	479.4	
55 (SHOULDER TABLE LT.)	1018.2		361.1	1308.3	10,182.0	37.2	1113.0		94.8	222.4	88.8	
55 (SHOULDER TABLE RT.)	504.4		175.7	557.4	5000.3		490.0					
56 (SHOULDER TABLE LT.)	976.1		351.4	745.1	9671.7	74.0	1115.4		189.6	444.4	177.6	
57 (SHOULDER TABLE LT.)	828.5		319.3	1247.7	8285.2	151.0	1077.5		370.1	905.4	362.1	
57 (SHOULDER TABLE RT.)	402.7		181.6	509.0	3889.0	203.8	685.8		499.8	1223.3	489.3	
58 (SHOULDER TABLE LT.)	1047.0		379.1	790.2	10,469.8	74.0	1198.3		189.6	444.4	177.6	
* DEDUCT 20,477' x 5' x .33' ÷ 27 = 1251 C.Y.				-1251								
TOTALS STATE & FEDERAL	16,035.9	106223.6	5944.6	3906.7	159,220.1	1751.1	18,898.6	7265.9	2378.9	10,505.8	4201.4	533.6

(TOTALS CARRIED TO GENERAL SUMMARY)

CITY, STATE & FEDERAL												
52 (PAVEMENT TABLE LT.)	723.2	6631.6	251.0		6631.6		722.0	20				
52 (PAVEMENT TABLE RT.)	293.9	1941.2	102.0		2940.2		276.1					
53 (PAVEMENT TABLE LT.)	673.7	6002.7	254.1		6002.7	88.4	785.4	550.2	57.0	530.2	212.0	133.4
53 (PAVEMENT TABLE RT.)	192.3	1723.3	66.8		1923.3		194.9					
54 (PAVEMENT TABLE LT.)	310.6	2633.0	116.2		2633.0		274.3					
55 (SHOULDER TABLE LT.)	214.2		73.6	290.5	2075.4		206.5					
56 (SHOULDER TABLE LT.)	232.1		78.2	161.3	2188.3		234.8					
57 (SHOULDER TABLE LT.)	106.7		39.7	163.7	879.1	18.6	134.6		47.4	111.2	44.4	
58 (SHOULDER TABLE LT.)	362.2		131.5	337.3	3489.0	37.0	422.5		94.8	222.2	88.8	
58 (SHOULDER TABLE RT.)	37.8		30.9			21.0	13.0					
* DEDUCT 5484' x 5' x .33' ÷ 27 = 335 C.Y.				- 335								
TOTALS CITY, STATE & FEDERAL	3146.7	18931.8	1144.0	617.8	28,762.6	165.0	3264.1	570.2	199.2	863.6	345.2	133.4

* DEDUCT FOR ITEM 606 GUARDRAIL TYPE 5, AS PER PLAN

LEGEND:
- ● PROPOSED PULL BOX
- O EXISTING PULL BOX
- — PROPOSED LOOP DETECTOR WIRE OR LEAD-IN CABLE
- --- EXISTING LEAD-IN CABLE
- ═ PROPOSED 3" CONDUIT

NOTE: SEE SHEET 64 FOR TRAFFIC SIGNAL DETECTOR QUANTITIES (M)

NOTE: For pavement marking quantities see sheets 70 & 71.

CALC. BY B.M. DATE 1-3-87	LIC-37-15.61	OHIO	62
CHKD. BY J.W.C. DATE 1-18-87	LIC-16-14.26	FHWA REGION 5	123

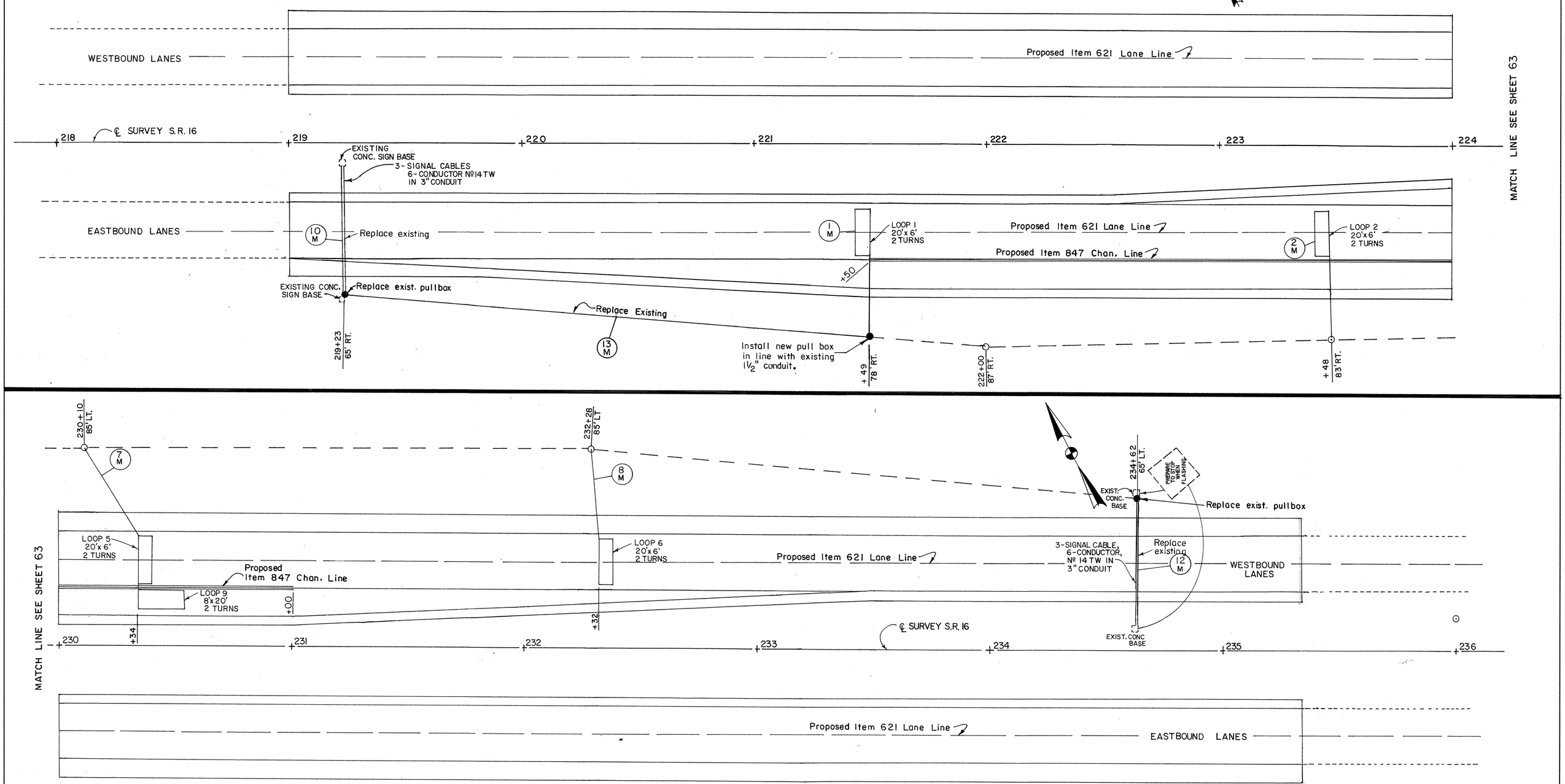

TRAFFIC CONTROL

FHWA REGION	STATE	PROJECT	
5	OHIO		

63/123

CALC. BY B.M.
DATE 1-3-89
CHECK. BY L.W.C.
DATE 1-18-89

LIC-37-15.61
LIC-16-14.26

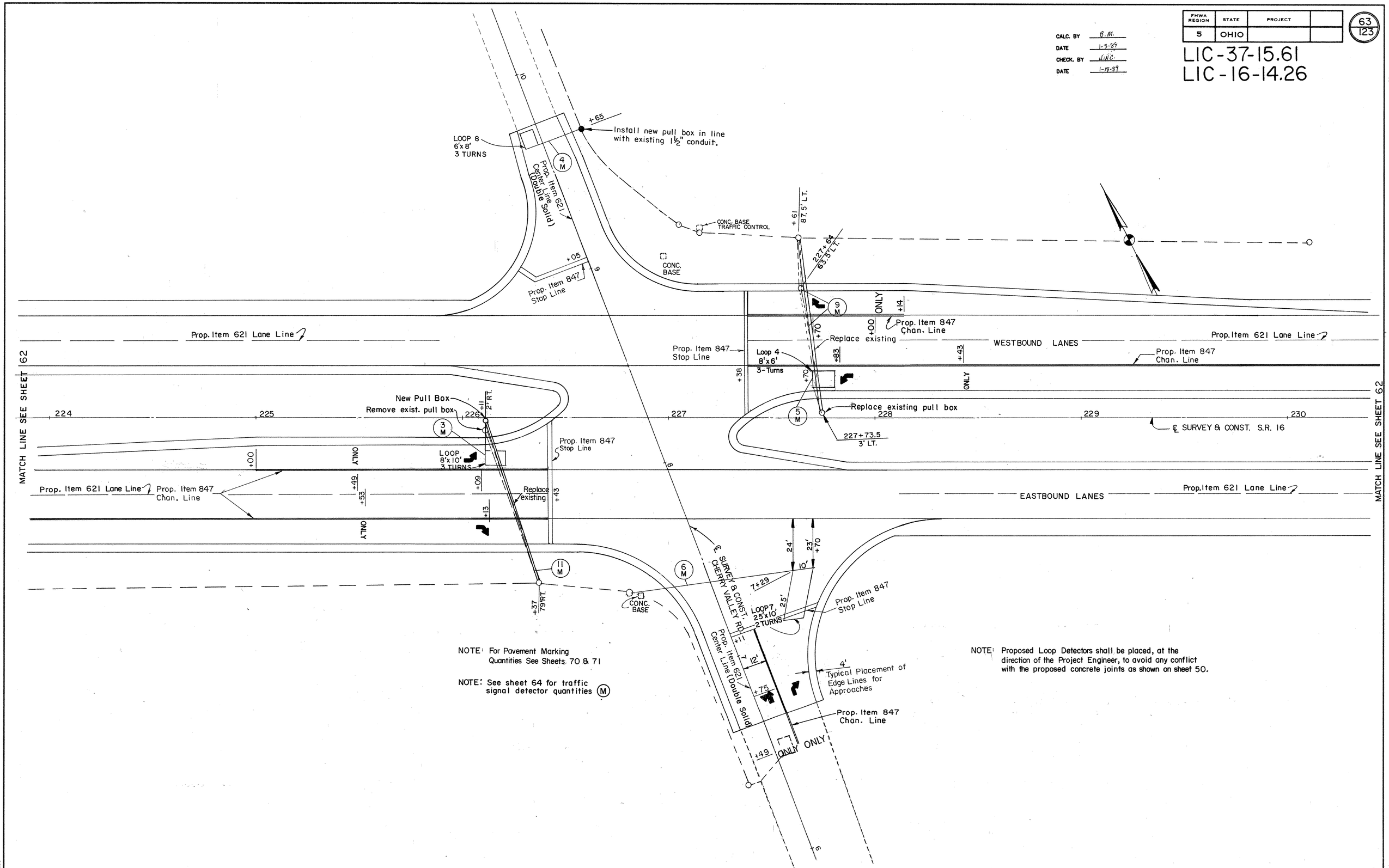

NOTE: For Pavement Marking Quantities See Sheets 70 & 71

NOTE: See sheet 64 for traffic signal detector quantities (M)

NOTE: Proposed Loop Detectors shall be placed, at the direction of the Project Engineer, to avoid any conflict with the proposed concrete joints as shown on sheet 50.

TRAFFIC CONTROL

TRAFFIC CONTROL SUB-SUMMARY

CALC. BY B.M. DATE 1-3-89	LIC-37-15.61	OHIO	64
CHKD. BY J.W.C. DATE 1-18-89	LIC-16-14.26	FHWA REGION 5	123

				ITEM 632				ITEM 625		202	632	625	202	625
LOCATION	MARK	SIDE	STATION TO STATION		LOOP DETECTOR LEAD – IN CABLE	LOOP DETECTOR WIRE, TYPE E	LOOP DETECTOR PAVEMENT CUTTING	PULL BOX, 713.09, 18"	CONDUIT, 713.04 3"	PULL BOX REMOVED	SIGNAL CABLE, 6-CONDUCTOR Nº 14	TRENCH	CONDUIT REMOVED	CONDUIT 713.04 1½"
					LIN. FT.	LIN. FT.	LIN. FT.	EACH	LIN. FT.	EACH	LIN. FT.	LIN. FT.	LIN. FT.	LIN. FT.
SR. 16	1-M	RT	221+49			186	70	1						
SR. 16	2-M	RT	223+47 – 223+48			186	70							
SR. 16	3-M	RT	226+11 – 222+21			148	42	1		1				
CVR	4-M	LT/RT	9+65 – 9+73			138	45	1						
SR. 16	5-M	LT	227+70 – 227+80			120	34	1		1				
SR. 16	6-M	RT	226+82 – 227+70			306	131							
SR. 16	7-M	LT	230+10 – 230+54			576	124							
SR. 16	8-M	LT	232+28 – 232+38			190	62							
SR. 16	9-M	LT/RT	227+61 – 227+73.5		95				85	1		85	85	
SR. 16	10-M	RT	219+23					1	57	1	201	57	57	
SR. 16	11-M	RT	226+11 – 226+37		93				83			83	78	
SR. 16	12-M	LT	234+62					1	57	1	201	57	57	
S.R. 16	13-M	RT.	219+23 – 221+49								708	226	226	226
TOTALS CARRIED TO GENERAL SUMMARY (STATE & FED.)					188	1850	578	6	282	5	1110	508	503	226

SEE STANDARD DRAWING TC – 82.10 DATE 8/29/84
SEE STANDARD DRAWING HL – 30.11 DATE 5/1/87

LOOP DETECTORS

LOOP Nº	SIZE	NO OF TURNS	STATION
1	20'x 6'	2	221+49
2	20'x 6'	2	223+47
3	8'x 10'	3	226+21
4	8'x 6'	3	227+70
5	20'x 6'	2	230+34
6	20'x 6'	2	232+32
7	25'x 10'	2	7+29
8	6'x 8'	3	9+65
9	8'x 20'	2	230+34

L0168266 (C) 8/24/88

TRAFFIC CONTROL SUB-SUMMARY

FHWA REGION	STATE	PROJECT	
5	OHIO		

CALC. BY S.A.B
DATE 1-3-89
CHECK. BY J.W.C
DATE 1-18-89

LIC-37-15.61
LIC-16-14.26

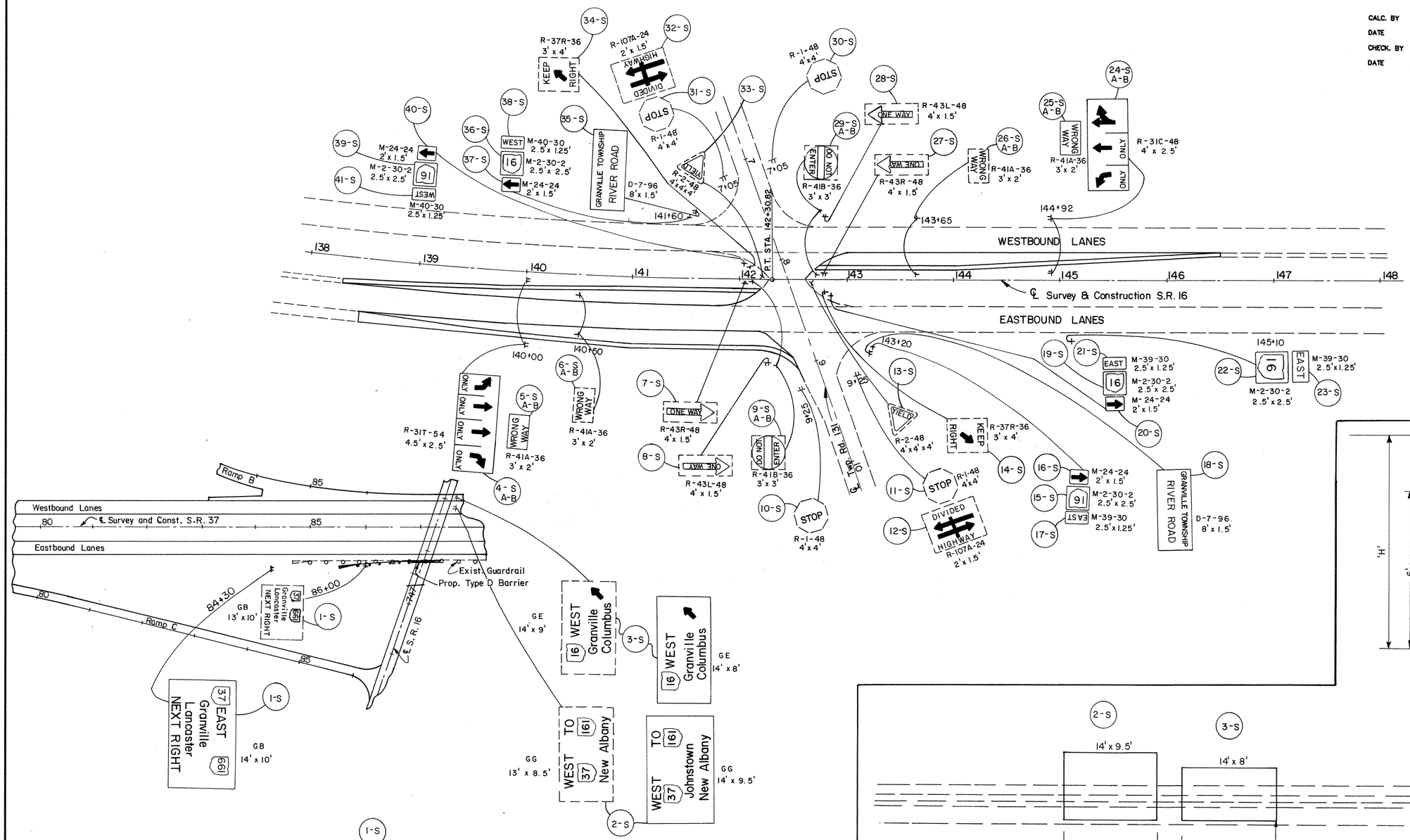

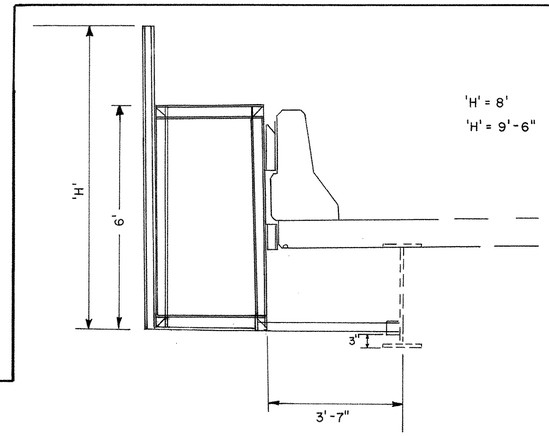

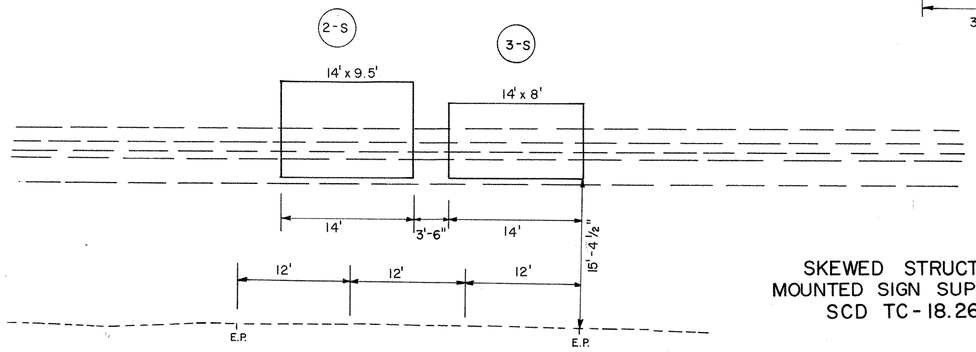

STATION 87+50± WB
TC 18.26 SKEWED
DESIGN 3

SKEWED STRUCTURE
MOUNTED SIGN SUPPORT
SCD TC-18.26

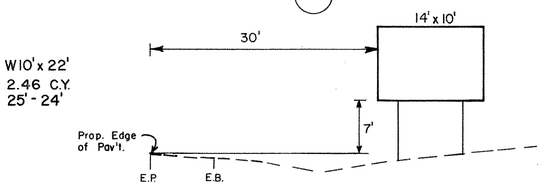

STATION 84+30 LIC 37 E.B.

NOTE: Sign # 2-S will require 2 additional Intermediate sign brackets, Detailed in NOTE # 10.

FOR QUANTITIES SEE SHEET 68 & 69.
FOR SIGNING AND SUPPORT WORK REQUIRED SEE SHEET 67.

SIGN DETAILS S.R. 16 INTERCHANGE AND TWP. RD. 131

FHWA REGION	STATE	PROJECT	
5	OHIO		

LIC-37-15.61
LIC-16-14.26

CALC. BY S.A.B
DATE 1-3-89
CHECK. BY J.W.C
DATE 1-18-89

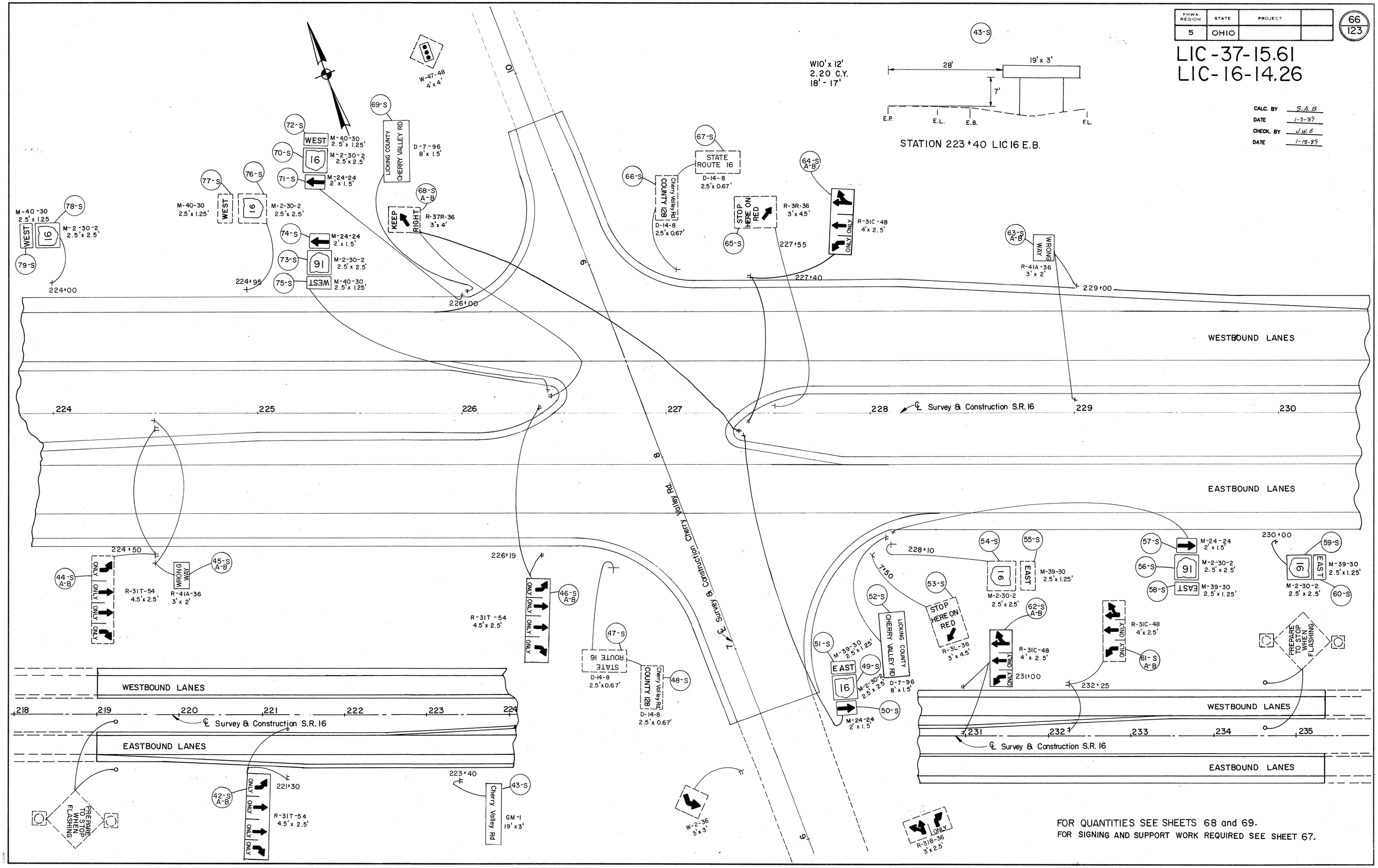

FOR QUANTITIES SEE SHEETS 68 and 69.
FOR SIGNING AND SUPPORT WORK REQUIRED SEE SHEET 67.

SIGN DETAILS CHERRY VALLEY RD.

CALC. BY S.A.B DATE 1-3-97	OHIO	67
CHKD. BY J.W.B DATE 1-16-97	FHWA REGION 5	123

LIC-37-15.61
LIC-16-14.26

Ⓢ SIGNING

MARK	SIGN CODE	WORK REQUIRED	CHECK TORQUE	QUANTITIES SEE SHEET	DESIGN LEVEL	SIGN SIZE
1-S	GB	REPLACE SIGN AND SUPPORTS		68	II	14' x 10'
2-S	GG	REPLACE SIGN AND SUPPORT			II	14' x 9.5'
3-S	GE	REPLACE SIGN AND SUPPORT			II	14' x 8'
4-S,A	R-31T-54	INSTALL NEW SIGN AND SUPPORTS				4.5' x 2.5'
4-S,B	R-31T-54	INSTALL NEW SIGN AND SUPPORTS				4.5' x 2.5'
5-S,A	R-41A-36	INSTALL NEW SIGN AND ERECT WITH 4-S,A				3' x 2'
5-S,B	R-41A-36	INSTALL NEW SIGN AND ERECT WITH 4-S,B				3' x 2'
6-S,A	R-41A-36	REMOVE SIGN AND SUPPORT				3' x 2'
6-S,B	R-41A-36	REMOVE SIGN AND SUPPORT				3' x 2'
7-S	R-43R-48	REPLACE SIGN AND SUPPORTS				4' x 1.5'
8-S	R-43L-48	REPLACE SIGN AND SUPPORTS				4' x 1.5'
9-S,A	R-41B-36	REPLACE SIGN AND SUPPORT				3' x 3'
9-S,B	R-41B-36	REPLACE SIGN AND SUPPORT				3' x 3'
10-S	R-1-48	REPLACE SIGN AND SUPPORTS				4' x 4'
11-S	R-1-48	REPLACE SIGN AND SUPPORTS				4' x 4'
12-S	R-107A-24	REPLACE SIGN AND ERECT WITH 11-S				2' x 1.5'
13-S	R-2-48	REPLACE SIGN AND SUPPORT				4' x 4' x 4'
14-S	R-37R-36	REPLACE SIGN AND SUPPORT				3' x 4'
15-S	M-2-30-2	INSTALL NEW SIGN AND SUPPORT				2.5' x 2.5'
16-S	M-24-24	INSTALL NEW SIGN AND ERECT WITH 15-S				2' x 1.5'
17-S	M-39-30	INSTALL NEW SIGN AND ERECT WITH 15-S				2.5' x 1.25'
18-S	D-7-96	INSTALL NEW SIGN AND SUPPORTS			C-3,E-8	8' x 1.5'
19-S	M-2-30-2	INSTALL NEW SIGN AND SUPPORT				2.5' x 2.5'
20-S	M-24-24	INSTALL NEW SIGN AND ERECT WITH 19-S				2' x 1.5'
21-S	M-39-30	INSTALL NEW SIGN AND ERECT WITH 19-S				2.5' x 1.25'
22-S	M-2-30-2	INSTALL NEW SIGN AND SUPPORT				2.5' x 2.5'
23-S	M-39-30	INSTALL NEW SIGN AND ERECT WITH 22-S				2.5' x 1.25'
24-S,A	R-31C-48	INSTALL NEW SIGN AND SUPPORTS				4' x 2.5'
24-S,B	R-31C-48	INSTALL NEW SIGN AND SUPPORTS				4' x 2.5'
25-S,A	R-41A-36	INSTALL NEW SIGN AND ERECT WITH 24-S,A				3' x 2'
25-S,B	R-41A-36	INSTALL NEW SIGN AND ERECT WITH 24-S,B				3' x 2'
26-S,A	R-41A-36	REMOVE SIGN AND SUPPORT				3' x 2'
26-S,B	R-41A-36	REMOVE SIGN AND SUPPORT				3' x 2'
27-S	R-43R-48	REPLACE SIGN AND SUPPORTS				4' x 1.5'
28-S	R-43L-48	REPLACE SIGN AND SUPPORTS				4' x 1.5'
29-S,A	R-41B-36	REPLACE SIGN AND SUPPORT				3' x 3'
29-S,B	R-41B-36	REPLACE SIGN AND SUPPORT				3' x 3'
30-S	R-1-48	REPLACE SIGN AND SUPPORTS				4' x 4'
31-S	R-1-48	REPLACE SIGN AND SUPPORTS				4' x 4'
32-S	R-107A-24	REPLACE SIGN AND ERECT WITH 31-S				2' x 1.5'
33-S	R-2-48	REPLACE SIGN AND SUPPORT				4' x 4' x 4'
34-S	R-37R-36	REPLACE SIGN AND SUPPORT				3' x 4'
35-S	D-7-96	INSTALL NEW SIGN AND SUPPORTS			C-3,E-8	8' x 1.5'
36-S	M-2-30-2	INSTALL NEW SIGN AND SUPPORT				2.5' x 2.5'
37-S	M-24-24	INSTALL NEW SIGN AND ERECT WITH 36-S				2' x 1.5'
38-S	M-40-30	INSTALL NEW SIGN AND ERECT WITH 36-S				2.5' x 1.25'
39-S	M-2-30-2	INSTALL NEW SIGN AND SUPPORT				2.5' x 2.5'
40-S	M-24-24	INSTALL NEW SIGN AND ERECT WITH 39-S				2' x 1.5'
41-S	M-40-30	INSTALL NEW SIGN AND ERECT WITH 39-S				2.5' x 1.25'
42-S,A	R-31T-54	INSTALL NEW SIGN AND SUPPORTS				4.5' x 2.5'
42-S,B	R-31T-54	INSTALL NEW SIGN AND SUPPORTS				4.5' x 2.5'
43-S	GM-1	INSTALL NEW SIGN AND SUPPORTS			II	19' x 3'
44-S,A	R-31T-54	REMOVE SIGN AND SUPPORTS				4.5' x 2.5'
44-S,B	R-31T-54	REMOVE SIGN AND SUPPORTS				4.5' x 2.5'
45-S,A	R-41A-36	INSTALL NEW SIGN AND SUPPORT				3' x 2'
45-S,B	R-41A-36	INSTALL NEW SIGN AND SUPPORT				3' x 2'
46-S,A	R-31T-54	INSTALL NEW SIGN AND SUPPORTS				4.5' x 2.5'
46-S,B	R-31T-54	INSTALL NEW SIGN AND SUPPORTS				4.5' x 2.5'
47-S	D-14-8	REMOVE SIGN AND SUPPORT				2.5' x 0.67'
48-S	D-14-8	REMOVE SIGN				2.5' x 0.67'
49-S	M-2-30-2	INSTALL NEW SIGN AND SUPPORT		68		2.5' x 2.5'
50-S	M-24-24	INSTALL NEW SIGN AND ERECT WITH 49-S		69		2' x 1.5'
51-S	M-39-30	INSTALL NEW SIGN AND ERECT WITH 49-S				2.5' x 1.25'
52-S	D-7-96	INSTALL NEW SIGN AND SUPPORTS			D-3,C-8	8' x 1.5'
53-S	R-3L-36	REPLACE SIGN AND SUPPORT				3' x 4.5'
54-S	M-2-30-2	REMOVE SIGN AND SUPPORT				2.5' x 2.5'
55-S	M-39-30	REMOVE SIGN				2.5' x 1.25'
56-S	M-2-30-2	INSTALL NEW SIGN AND SUPPORT				2.5' x 2.5'
57-S	M-24-24	INSTALL NEW SIGN AND ERECT WITH 56-S				2' x 1.5'
58-S	M-39-30	INSTALL NEW SIGN AND ERECT WITH 56-S				2.5' x 1.25'
59-S	M-2-30-2	INSTALL NEW SIGN AND SUPPORT				2.5' x 2.5'
60-S	M-39-30	INSTALL NEW SIGN AND ERECT WITH 59-S		69		2.5' x 1.25'

Ⓢ SIGNING

MARK	SIGN CODE	WORK REQUIRED	CHECK TORQUE	QUANTITIES SEE SHEET	DESIGN LEVEL	SIGN SIZE
61-S,A	R-31C-48	REMOVE SIGN AND SUPPORTS		69		4' x 2.5'
61-S,B	R-31C-48	REMOVE SIGN AND SUPPORTS				4' x 2.5'
62-S,A	R-31C-48	INSTALL NEW SIGN AND SUPPORTS				4' x 2.5'
62-S,B	R-31C-48	INSTALL NEW SIGN AND SUPPORTS				4' x 2.5'
63-S,A	R-41A-36	INSTALL NEW SIGN AND SUPPORT				3' x 2'
63-S,B	R-41A-36	INSTALL NEW SIGN AND SUPPORT				3' x 2'
64-S,A	R-31C-48	INSTALL NEW SIGN AND SUPPORTS				4'x 2.5'
64-S,B	R-31C-48	INSTALL NEW SIGN AND SUPPORTS				4' x 2.5'
65-S	R-3R-36	REPLACE SIGN AND SUPPORT				3' x 4.5'
66-S	D-14-8	REMOVE SIGN AND SUPPORT				2.5' x 0.67'
67-S	D-14-8	REMOVE SIGN				2.5' x 0.67'
68-S,A	R-37R-36	REPLACE SIGN AND SUPPORTS				3' x 4'
68-S,B	R-37R-36	REPLACE SIGN AND SUPPORTS				3' x 4'
69-S	D-7-96	INSTALL NEW SIGN AND SUPPORTS			D-3,C-8	8' x 1.5'
70-S	M-2-30-2	INSTALL NEW SIGN AND SUPPORT				2.5' x 2.5'
71-S	M-24-24	INSTALL NEW SIGN AND ERECT WITH 70-S				2' x 1.5'
72-S	M-40-30	INSTALL NEW SIGN AND ERECT WITH 70-S				2.5' x 1.25'
73-S	M-2-30-2	INSTALL NEW SIGN AND SUPPORT				2.5' x 2.5'
74-S	M-24-24	INSTALL NEW SIGN AND ERECT WITH 73-S				2' x 1.5'
75-S	M-40-30	INSTALL NEW SIGN AND ERECT WITH 73-S				2.5' x 1.25'
76-S	M-2-30-2	REMOVE SIGN AND SUPPORT				2.5' x 2.5'
77-S	M-40-30	REMOVE SIGN				2.5' x 1.25'
78-S	M-2-30-2	INSTALL NEW SIGN AND SUPPORT				2.5' x 2.5'
79-S	M-40-30	INSTALL NEW SIGN AND ERECT WITH 78-S		69		2.5' x 1.25'

SIGNING SUB-SUMMARY

NOTE: * Signs shall be fabricated on Extrusheet, Type G with (DAW) direct applied copy, reflective sheeting silver white.

NOTE: For item 630 – Removal of ground mounted sign and storage, Call Licking County Engineer, Jerry Wray, at 349-6054, for pick up.

CALC. BY SAB DATE 1-3-89
CHKD. BY DWC DATE 1-18-89

LIC-37-15.61
LIC-16-14.26

OHIO
FHWA REGION 5

LOCATION	MARK	SIDE	STATION	SHEET NO.	SIGN REFERENCE NUMBER	SIZE	ITEM 630																													
									SIGNS, FLAT SHEET TYPE G		SIGNS, EXTRUSHEET TYPE G		GROUND MOUNTED SUPPORTS, NO.2 POST	GROUND MOUNTED SUPPORTS, NO. 3 POST	GROUND MOUNTED SUPPORTS, NO. 4 POST				GROUND MOUNTED SUPPORTS, W10x12 BEAM	GROUND MOUNTED SUPPORTS, W10x22 BEAM		CONCRETE FOR EMBEDDED FOUNDATION			BREAKAWAY BEAM CONNECTION		REMOVAL OF GROUND MOUNTED SIGN AND DISPOSAL	REMOVAL OF GROUND MOUNTED MAJOR SIGN AND DISPOSAL	REMOVAL OF GROUND MOUNTED POST SUPPORT AND DISPOSAL	REMOVAL OF GROUND MOUNTED BEAM SUPPORT AND DISPOSAL	REMOVAL OF GROUND MOUNTED SIGN AND STORAGE			REMOVAL OF OVERHEAD MOUNTED SIGN AND DISPOSAL	OVERPASS STRUCTURE MOUNTED SIGN SUPPORT, TYPE TC-18.26, DESIGN 3	REMOVAL OF OVERHEAD SIGN SUPPORT AND DISPOSAL, TYPE TC 18.26	REMOVAL OF LUMINAIRE SUPPORT ASSEMBLY AND DISPOSAL		
						FT. x FT.			SQ.FT.		SQ.FT.		LIN.FT.	LIN.FT.	LIN.FT.				LIN.FT.	LIN.FT.		CU.YD.			EACH		EACH	EACH	EACH	EACH	EACH			EACH	EACH	EACH	EACH		
SR37 EB	1-S	RT	84+30±		GB	14' x 10'					140.00									25-24		2.46			2			1		2								
SR37 WB	2-S	LT	87+50±		GG	14' x 9.5'					133.00																							1	1	1	3		
SR37 WB	3-S	LT	87+50±		GE	14' x 8'					112.00																							1	1	1	3		
SR16 EB	4-S,A	RT	140+00		R-31T-54	4.5' x 2.5'			11.25					13-13																								
SR16 EB	4-S,B	MED	140+00		R-31T-54	4.5' x 2.5'			11.25					13-13																								
SR16 EB	5-S,A	RT	140+00		R-41A-36	3' x 2'			6.00																													
SR16 EB	5-S,B	MED	140+00		R-41A-36	3' x 2'			6.00																													
SR16 EB	6-S,A	RT	140+50		R-41A-36	3' x 2'																					1		1									
SR16 EB	6-S,B	MED	140+50		R-41A-36	3' x 2'																					1		1									
SR16 EB	7-S	MED	142+00±		R-43R-48	4' x 1.5'			6.00				12-12														1		2									
SR16 EB	8-S	RT	142+00±		R-43L-48	4' x 1.5'			6.00				12-12														1		2									
SR16 EB	9-S,A	RT	142+00±		R-41B-36	3' x 3'			9.00						14												1		1									
SR16 EB	9-S,B	MED	142+00±		R-41B-36	3' x 3'			9.00						14												1		1									
TWP 131	10-S	LT	9+25		R-1-48	4' x 4'			16.00						15-15												1		2									
TWP 131	11-S	RT	9+25		R-1-48	4' x 4'			16.00						16-16												1		2									
TWP 131	12-S	RT	9+25		R-107A-24	2' x 1.5'			3.00																		1											
SR16 EB	13-S	MED	142+00±		R-2-48	4' x 4' x 4'			6.93					14-14													1		1									
SR16 EB	14-S	MED	142+00±		R-37R-36	3' x 4'			12.00					15-15													1		1									
SR16 EB	15-S	RT	143+20		M-2-30-2	2.5' x 2.5'			6.25						15																							
SR16 EB	16-S	RT	143+20		M-24-24	2' x 1.5'			3.00																													
SR16 EB	17-S	RT	143+20		M-39-30	2.5' x 1.25'			3.13																													
SR16 EB	18-S	RT	143+20		D-7-96	8' x 1.5'					*12.00			12-12																								
SR16 EB	19-S	MED	142+00±		M-2-30-2	2.5' x 2.5'			6.25						15																							
SR16 EB	20-S	MED	142+00±		M-24-24	2' x 1.5'			3.00																													
SR16 EB	21-S	MED	142+00±		M-39-30	2.5' x 1.25'			3.13																													
SR16 EB	22-S	RT	145+10		M-2-30-2	2.5' x 2.5'			6.25						15																							
SR16 EB	23-S	RT	145+10		M-39-30	2.5' x 1.25'			3.13																													
SR16 WB	24-S,A	LT	144+92		R-31C-48	4' x 2.5'			10.00					13-13																								
SR16 WB	24-S,B	MED	144+92		R-31C-48	4' x 2.5'			10.00					13-13																								
SR16 WB	25-S,A	LT	144+92		R-41A-36	3' x 2'			6.00																													
SR16 WB	25-S,B	MED	144+92		R-41A-36	3' x 2'			6.00																													
SR16 WB	26-S,A	LT	143+65		R-41A-36	3' x 2'																					1		1									
SR16 WB	26-S,B	MED	143+65		R-41A-36	3' x 2'																					1		1									
SR16 WB	27-S	MED	142+00±		R-43R-48	4' x 1.5'			6.00				12-12														1		2									
SR16 WB	28-S	LT	142+00±		R-43L-48	4' x 1.5'			6.00				12-12														1		2									
SR16 WB	29-S,A	LT	142+00±		R-41B-36	3' x 3'			9.00						14												1		1									
SR16 WB	29-S,B	MED	142+00±		R-41B-36	3' x 3'			9.00						14												1		1									
TWP 131	30-S	RT	7+05		R-1-48	4' x 4'			16.00						15-15												1		2									
TWP 131	31-S	LT	7+05		R-1-48	4' x 4'			16.00						16-16												1		2									
TWP 131	32-S	LT	7+05		R-107A-24	2' x 1.5'			3.00																		1											
SR16 WB	33-S	MED	142+00±		R-2-48	4' x 4' x 4'			6.93					14-14													1		1									
SR16 WB	34-S	MED	142+00±		R-37R-36	3' x 4'			12.00					15-15													1		1									
SR16 WB	35-S	LT	141+60		D-7-96	8' x 1.5'					*12.00			12-12																								
SR16 WB	36-S	LT	141+60		M-2-30-2	2.5' x 2.5'			6.25						15																							
SR16 WB	37-S	LT	141+60		M-24-24	2' x 1.5'			3.00																													
SR16 WB	38-S	LT	141+60		M-40-30	2.5' x 1.25'			3.13																													
SR16 WB	39-S	MED	142+00±		M-2-30-2	2.5' x 2.5'			6.25						15																							
SR16 WB	40-S	MED	142+00±		M-24-24	2' x 1.5'			3.00																													
SR16 WB	41-S	MED	142+00±		M-40-30	2.5' x 1.25'			3.13																													
SR16 EB	42-S,A	RT	221+30		R-31T-54	4.5' x 2.5'			11.25					13-13																								
SR16 EB	42-S,B	MED	221+30		R-31T-54	4.5' x 2.5'			11.25					13-13																								
SR16 EB	43-S	RT	223+40		GM-1	19' x 3'					57.00								18-17			2.20			2													
SR16 EB	44-S,A	RT	224+50		R-31T-54	4.5' x 2.5'																					1		2									
SR16 EB	44-S,B	MED	224+50		R-31T-54	4.5' x 2.5'																					1		2									
SR16 EB	45-S,A	RT	224+50		R-41A-36	3' x 2'			6.00					13																								
SR16 EB	45-S,B	MED	224+50		R-41A-36	3' x 2'			6.00					13																								
SR16 EB	46-S,A	RT	226+19		R-31T-54	4.5' x 2.5'			11.25					13-13																								
SR16 EB	46-S,B	MED	226+19		R-31T-54	4.5' x 2.5'			11.25					13-13																								
SR16 EB	47-S	RT	226+50±		D-14-8	2.5' x 0.67'																							1		1							
SR16 EB	48-S	RT	226+50±		D-14-8	2.5' x 0.67'																									1							
SR16 EB	49-S	MED	226+50±		M-2-30-2	2.5' x 2.5'			6.25						15																							
Totals Carried to Sheet 69									356.51		466.00		96	398	270				35	49		4.66			4		24	1	33	2	2			2	2	2	6		

SIGNING SUB-SUMMARY

NOTE: * Signs shall be fabricated on Extrusheet, Type G with (DAW) direct applied copy, reflective sheeting silver white.

NOTE: For item 630 – Removal of ground mounted sign and storage, Call Licking County Engineer, Jerry Wray, at 349-6054, for pick up.

CALC. BY SAB DATE 1-3-87
CHKD. BY JWG DATE 1-18-87

LIC-37-15.61
LIC-16-14.26

OHIO
FHWA REGION 5

LOCATION	MARK	SIDE	STATION	SHEET NO.	SIGN REFERENCE NUMBER	SIZE	ITEM 630 SIGNS, FLAT SHEET TYPE G	SIGNS, EXTRUSHEET TYPE G	GROUND MOUNTED SUPPORTS, NO.2 POST	GROUND MOUNTED SUPPORTS, NO. 3 POST	GROUND MOUNTED SUPPORTS, NO. 4 POST	GROUND MOUNTED SUPPORTS, W10x12 BEAM	GROUND MOUNTED SUPPORTS, W10x22 BEAM	CONCRETE FOR EMBEDDED FOUNDATION	BREAKAWAY BEAM CONNECTION	REMOVAL OF GROUND MOUNTED SIGN AND DISPOSAL	REMOVAL OF GROUND MOUNTED MAJOR SIGN AND DISPOSAL	REMOVAL OF GROUND MOUNTED POST SUPPORT AND DISPOSAL	REMOVAL OF GROUND MOUNTED BEAM SUPPORT AND DISPOSAL	REMOVAL OF GROUND MOUNTED SIGN AND STORAGE	REMOVAL OF OVERHEAD MOUNTED SIGN AND DISPOSAL	OVERPASS STRUCTURE MOUNTED SIGN SUPPORT, TYPE TC-18.26, DESIGN 3	REMOVAL OF OVERHEAD SIGN SUPPORT AND DISPOSAL, TYPE TC 18.26	REMOVAL OF LUMINAIRE SUPPORT ASSEMBLY AND DISPOSAL
						FT. x FT.	SQ.FT.	SQ.FT.	LIN.FT.	LIN.FT.	LIN.FT.	LIN.FT.	LIN.FT.	CU.YD.	EACH	EACH	EACH	EACH	EACH	EACH	EACH	EACH	EACH	EACH
SR16 EB	50-S	MED	226+50±		M-24-24	2' x 1.5'	3.00																	
SR16 EB	51-S	MED	226+50±		M-39-30	2.5' x 1.25'	3.13																	
SR16 EB	52-S	RT	228+10±		D-7-96	8' x 1.5'		*12.00		12-12														
Cherry Valley Rd	53-S	RT	7+50		R-3L-36	3' x 4.5'	13.50			15-15						1		1						
SR16 EB	54-S	RT	228+10		M-2-30-2	2.5' x 2.5'										1		1						
SR16 EB	55-S	RT	228+10		M-39-30	2.5' x 1.25'										1								
SR16 EB	56-S	RT	228+10±		M-2-30-2	2.5' x 2.5'	6.25				15													
SR16 EB	57-S	RT	228+10±		M-24-24	2' x 1.5'	3.00																	
SR16 EB	58-S	RT	228+10±		M-39-30	2.5' x 1.25'	3.13																	
SR16 EB	59-S	RT	230+00		M-2-30-2	2.5' x 2.5'	6.25				15													
SR16 EB	60-S	RT	230+00		M-39-30	2.5' x 1.25'	3.13																	
SR16 WB	61-S,A	LT	232+25		R-31C-48	4' x 2.5'										1		2						
SR16 WB	61-S,B	MED	232+25		R-31C-48	4' x 2.5'										1		2						
SR16 WB	62-S,A	LT	231+00		R-31C-48	4' x 2.5'	10.00			13-13														
SR16 WB	62-S,B	MED	231+00		R-31C-48	4' x 2.5'	10.00			13-13														
SR16 WB	63-S,A	LT	229+00		R-41A-36	3' x 2'	6.00			13														
SR16 WB	63-S,B	MED	229+00		R-41A-36	3' x 2'	6.00			13														
SR16 WB	64-S,A	LT	227+40		R-31C-48	4'x 2.5'	10.00			13-13														
SR16 WB	64-S,B	MED	227+40		R-31C-48	4' x 2.5'	10.00			13-13														
SR16 WB	65-S	MED	227+55		R-3R-36	3' x 4.5'	13.50			15-15						1		1						
SR16 WB	66-S	LT	227+00±		D-14-8	2.5' x 0.67'												1		1				
SR16 WB	67-S	LT	227+00±		D-14-8	2.5' x 0.67'														1				
SR16 WB	68-S,A	MED	227+35±		R-37R-36	3' x 4'	12.00			15-15						1		2						
SR16 WB	68-S,B	MED	226+40±		R-37R-36	3' x 4'	12.00			15-15						1		2						
SR16 WB	69-S	LT	226+00		D-7-96	8' x 1.5'		*12.00		12-12														
SR16 WB	70-S	LT	226+00		M-2-30-2	2.5' x 2.5'	6.25				15													
SR16 WB	71-S	LT	226+00		M-24-24	2' x 1.5'	3.00																	
SR16 WB	72-S	LT	226+00		M-40-30	2.5' x 1.25'	3.13																	
SR16 WB	73-S	MED	226+40±		M-2-30-2	2.5' x 2.5'	6.25				15													
SR16 WB	74-S	MED	226+40±		M-24-24	2' x 1.5'	3.00																	
SR16 WB	75-S	MED	226+40±		M-40-30	2.5' x 1.25'	3.13																	
SR16 WB	76-S	LT	224+95		M-2-30-2	2.5' x 2.5'										1		1						
SR16 WB	77-S	LT	224+95		M-40-30	2.5' x 1.25'										1								
SR16 WB	78-S	LT	224+00		M-2-30-2	2.5' x 2.5'	6.25				15													
SR16 WB	79-S	LT	224+00		M-40-30	2.5' x 1.25'	3.13																	
					TOTAL THIS SHEET		165.03	24.00		298	75					10		13		2				
					TOTAL CARRIED FROM SHEET 68		356.51	466.00	96	398	270	35	49	4.66	4	24	1	33	2	2	2	2	2	6
Totals Carried General Summary							521.54	490.00	96	696	345	35	49	4.66	4	34	1	46	2	4	2	2	2	6

PAVEMENT MARKING SUB-SUMMARY (EASTBOUND)

SEE STD.DRAWING TC-72.20

ITEM 847 TRANSVERSE LINES 947.02 (WHITE) LIN.FT.	ITEM 847 CHANNELIZING LINES 947.02 LIN.FT.	ITEM 621 4" LANE LINE MILE	STATION FROM	STATION TO
			STATE & FEDERAL	
		3.66	66+50 E.B.	259+77.84 E.B.
		0.04	73+95 E.B.	75+87 E.B.
150	380		75+87 E.B.	77+77 E.B.
40	192		743+34 S.R.16	744+30 S.R.16
	238		92+62 RAMP D	95+00 RAMP D
		0.14	95+00 E.B.	102+25 E.B.
115	350		102+25 E.B.	104+00 E.B.
	288		123+42 RAMP H	126+30 RAMP H
		0.05	126+30 E.B.	129+00 E.B.
	119		140+99.5 E.B. (RT.)	142+18.5 E.B. (RT.)
	120		140+80 E.B. (LT.)	142+00 E.B. (LT.)
	493		221+50 E.B. (RT.)	226+43 E.B. (RT.)
	143		225+00 E.B. (LT.)	226+43 E.B. (LT.)
	46		CHERRY VALLEY RD. LT.	(See sheet 63)
		** 7.32		
305	2369	11.21	*TOTALS (CARRIED TO SHEET 71)	
			CITY, STATE & FEDERAL	
		0.46	259+77.84 E.B.	283+89.68 E.B.
		0.04	10+00 E.B.	12+00 E.B.
	180		280+90 LINE A	282+70 LINE A
		** 1.00		
	180	1.50	*TOTALS (CARRIED TO SHEET 71)	

*SUB-TOTALS

SEE STD.DRAWING TC-71.10

847 WORD ON PAVEMENT 96" (ONLY) 947.02 EACH	ITEM 847 STOP LINE 947.02 LIN.FT.	ITEM 847 LANE ARROW 947.02 EACH (THRU)	(TURN)	STATION		ITEM 847 LANE ARROW 947.02 EACH COMBINED
	35			86+33 RAMP C		
	30			112+35 RAMP G		
	59			226+43 E.B.		
	10			S.R.16 DRIVE TO TENNIS COURTS	See Sheet 28	
	12			S.R.16 @ T.R.131	See Sheet 28	
	45			T.R.131	See Sheet 30	
	45			CHERRY VALLEY RD. LT.	See Sheet 63	
			1	6+75 CHERRY VALLEY RD. LT.		1
2				6+49 CHERRY VALLEY RD LT.		
		1		86+03 RAMP C		
		1		112+05 RAMP G		
1				141+48 E.B. (RT.)		
			1	141+88 E.B. (RT.)		
1				141+51 E.B. (LT.)		
			1	141+91 E.B. (LT.)		
1				225+49 E.B. (LT.)		
			1	226+09 E.B. (LT.)		
1				225+53 E.B. (RT.)		
			1	226+13 E.B. (RT.)		
6	236	2	5	*TOTALS (CARRIED TO SHEET 71)		1
				CITY, STATE & FEDERAL		
	20 / 30			HOWELL DRIVE CROSSOVER		
	50			*TOTALS (CARRIED TO SHEET 71)		

ITEM 621 EDGE LINES 4" WHITE EDGE LINE MILE	4" YELLOW EDGE LINE MILE	CENTER LINES (DOUBLE YELLOW) MILE	STATION FROM	STATION TO	SEE SHEET
			STATE & FEDERAL		
	1.43		66+50 E.B.	142+21 E.B.	
	1.58		143+10 E.B.	226+43 E.B.	
	0.60		227+86 E.B.	259+77.84 E.B.	
0.14			66+50 E.B.	73+73.37 E.B.	
0.24			73+73.37 RAMP C	86+33 RAMP C	
	0.16		77+75 RAMP C	86+33 RAMP C	
	0.02		85+34 RAMP D	86+54 RAMP D	
0.01			RAMP D-D 60'	See Sheet 28	
	0.02		RAMP D-D 85'	See Sheet 28	
	0.12		87+00 RAMP D	93+47 RAMP D	
0.01			741+54 S.R.16	742+00 S.R.16	
0.23			83+09.71 RAMP D	95+08.92 RAMP D	
0.33			77+77 E.B.	95+00 E.B.	
0.11			95+08.92 E.B.	100+70 E.B.	
0.22			100+70 RAMP G	112+35 RAMP G	
	0.16		104+00 RAMP G	112+35 RAMP G	
0.42			104+00 E.B.	126+30 E.B.	
	0.04		2+10 RAMP H-H	4+05 RAMP H-H	
	0.21		112+18.72 RAMP H	123+42 RAMP H	
0.03			112+18.72 RAMP H	113+75 RAMP H	
0.05			2+10 RAMP H-H	4+65 RAMP H-H	
0.25			114+32 RAMP H	127+75.21 RAMP H	
0.27			127+75.21 E.B.	142+18.5 E.B.	
1.58			143+30 E.B.	226+55.82	
** 7.32	** 7.32				
0.60			228+32.15 E.B.	259+77.84 E.B.	
		0.25	741+54 S.R.16	754+65 S.R.16	
0.20			741+54 S.R.16 (LT.)	754+65 S.R.16 (LT.)	DEDUCT 260'
0.17			744+28 S.R.16 (RT.)	754+65 S.R16 (RT.)	DEDUCT 130'
0.03		0.01	T.R.131	See Sheet 30	
0.05		0.01	CHERRY VALLEY RD. (LT.)	See Sheet 63	
12.26	11.66	0.27	*TOTALS (CARRIED TO SHEET 71)		
			CITY, STATE & FEDERAL		
	0.43		259+77.84 E.B.	282+70 E.B.	
	0.25		270+86 LINE A	283+89.68 LINE A	
	0.04		10+00 E.B.	12+00 E.B.	
** 1.00	** 1.00				
0.46			259+77.84 E.B.	283+89.68 E.B.	
0.04			10+00 E.B.	12+00 E.B.	
0.09			263+00 LINE A-B	267+72.36 LINE A-B	
0.25			267+72.36 LINE A	280+90 LINE A	
0.03		0.01	HOWELL DRIVE CROSSOVER		
1.87	1.72	0.01	*TOTALS (CARRIED TO SHEET 71)		

** NOTE: TO BE USED FOR TRAFFIC CONTROL AS DESCRIBED FOR ITEM 614 MAINTAINING TRAFFIC SHEET 9.

L0161458

PAVEMENT MARKING SUB-SUMMARY (WESTBOUND)

CALC. BY	DATE	CHKD. BY	DATE	LIC-37-15.61 LIC-16-14.26	OHIO	FHWA REGION 5	71 / 123

SEE STD.DRAWING TC-72.20

ITEM 847 TRANSVERSE LINES 947.02 (WHITE) LIN.FT.	ITEM 847 CHANNELIZING LINES 947.02 LIN.FT.	ITEM 621 4" LANE LINE MILE	STATION FROM	STATION TO
			STATE & FEDERAL	
		3.66	66+50 W.B.	259+77.84 W.B.
		0.01	76+05 W.B.	76+75 W.B.
	123		76+75 W.B.	77+98 W.B.
145	350		84+11 W.B.	85+86 W.B.
		0.03	85+86 W.B.	87+64 W.B.
		0.04	103+07 W.B.	105+15 W.B.
	181		105+15 W.B.	106+96 W.B.
147	420		118+10 W.B.	120+20 W.B.
		0.03	120+20 W.B.	121+82 W.B.
	100		143+00 W.B. (RT.)	144+00 W.B. (RT.)
	362		227+38 W.B. (RT.)	231+00 W.B. (RT.)
	76		227+38 W.B. (LT)	228+14 W.B. (LT.)
292	1612	3.77	SUB-TOTALS	
305	2369	11.21	SUB TOTALS (FROM SHEET 70)	
597	3981	14.98	TOTALS (CARRIED TO GENERAL SUMMARY)	
			CITY, STATE & FEDERAL	
		0.46	259+77.84 W.B.	283+89.68 W.B.
		0.08	10+00 W.B.	14+23 W.B.
125	350		282+50 W.B.	10+35.32 W.B.
		0.07	10+35.32 W.B.	14+23 W.B.
125	350	0.61	SUB-TOTALS	
	180	1.50	SUB-TOTALS (FROM SHEET 70)	
125	530	2.11	TOTALS (CARRIED TO GENERAL SUMMARY)	

SEE STD.DRAWING TC-71.10

847 WORD ON PAVEMENT 96" (ONLY) 947.02 EACH	ITEM 847 STOP LINE 947.02 LIN.FT.	ITEM 847 LANE ARROW 947.02 EACH (THRU)	(TURN)	STATION		ITEM 847 LANE ARROW 947.02 EACH COMBINED
				STATE & FEDERAL		
	24			90+93 RAMP A-B		
		1		90+63 RAMP A-B		
		1		90+54 RAMP A-B		
		1		91+00 RAMP B-B		
	35			110+96 RAMP F		
		1		111+26 RAMP F		
			1	143+10 W.B.		
1				143+41 W.B.		
	45			TWP.RD.131 (RT.)	See Sheet 30	
	36			CHERRY VALLEY RD. (RT.)	See Sheet 63	
	58			227+38 W.B.		
			1	227+83 W.B.		
1				228+43 W.B.		
			1	227+70 W.B.		
1				228+00 W.B.		
3	198	4	3	SUB-TOTALS		
6	236	2	5	SUB-TOTALS (FROM SHEET 70)		
9	434	14		TOTALS (CARRIED TO GENERAL SUMMARY)		1
				CITY, STATE & FEDERAL		
	25			HOWELL DRIVE		
	25			SUB-TOTALS		
	50			SUB-TOTALS (FROM SHEET 70)		
	75			TOTALS (CARRIED TO GENERAL SUMMARY)		

ITEM 621 EDGE LINES 4" WHITE EDGE LINE MILE	4" YELLOW EDGE LINE MILE	CENTER LINES (DOUBLE YELLOW) MILE	STATION FROM	STATION TO
			STATE & FEDERAL	
	1.43		66+50 W.B.	141+75 W.B.
	1.58		142+75 W.B.	225+94.65 W.B.
	0.61		227+72.29 W.B.	259+77.84 W.B.
0.16			66+50 W.B.	75+14.94 W.B.
0.18			75+14.94 RAMP A	84+51.5 RAMP A
0.12			84+51.5 RAMP A-B	91+03.63 RAMP A-B
	0.12		77+98 RAMP A	84+51.5 RAMP A
	0.12		84+51.5 RAMP A-B	90+93.03 RAMP A-B
	0.12		84+51.5 RAMP A-B	90+93.03 RAMP A-B
	0.11		78+41.7 RAMP B	84+11 RAMP B
0.15			76+75 W.B.	84+11 W.B.
	0.04		89+26.61 RAMP B-B	91+48.25 RAMP B-B
0.06			84+51.5 RAMP A-B	87+86.51 RAMP A-B
0.09			87+86.51 RAMP B-B	92+37.15 RAMP B-B
0.16			78+41.17 RAMP B	87+00 RAMP B
0.33			87+00 W.B.	104+40 W.B.
0.13			104+40 RAMP E	111+20.13 RAMP E
	0.08		106+96 RAMP E	111+20.13 RAMP E
0.25			105+15 W.B.	118+10 W.B.
	0.14		110+96.32 RAMP F	118+10 RAMP F
0.19			110+96.32 RAMP F	121+00 RAMP F
0.39			121+00 W.B.	141+55 W.B.
1.57			142+75 W.B.	225+85.81 W.B.
0.62			227+13.99 W.B.	259+77.84 W.B.
0.02			TWP.RD.131 (RT.)	See Sheet 30
0.04			CHERRY VALLEY RD. (RT.)	See Sheet 63
		0.01	T.R.131 (RT.)	See Sheet 30
4.46	4.35	0.01	SUB-TOTALS	
12.26	11.66	0.27	SUB-TOTALS (FROM SHEET 70)	
32.73		0.28	TOTALS (CARRIED TO GENERAL SUMMARY)	
			CITY, STATE & FEDERAL	
	0.46		259+77.84 W.B.	283+89.68 W.B.
	0.08		10+00 W.B.	14+23 W.B.
0.43			259+77.84 W.B.	282+50 W.B.
	0.20		271+74.11 LINE B	282+50 LINE B
		0.13	263+00 LINE A-B	270+00.36 LINE A-B
		0.02	270+86.63 LINE B	271+74.11 LINE B
0.13			263+00 LINE A-B	270+00.36 LINE A-B
0.25			270+86.63 LINE B	283+89.68 LINE B
0.08			10+00 W.B.	14+23 W.B.
		0.01	CHERRY VALLEY RD. (RT.)	See Sheet 63
		0.01	HOWELL DRIVE	See. Sheet 51
0.89	0.74	0.17	SUB-TOTALS	
1.87	1.72	0.01	SUB-TOTALS (FROM SHEET 70)	
5.22		0.18	TOTALS (CARRIED TO GENERAL SUMMARY)	

621 CURB MARKING (YELLOW) LIN. FT.	621 ISLAND MARKING (YELLOW) SQ. FT.	STATION FROM	STATION TO
832		80+54 Ramp B	90+70 Ramp A-B
845		82+25 Ramp A	90+70 Ramp A-B
	1932	83+25 Ramp A	90+69.5 Ramp A-B
1677	1932	TOTALS (Carried to General Summary)	

STATE & FEDERAL

L0161450

ITEM 614 TEMPORARY PAVEMENT MARKINGS

(SEE STANDARD DRAWING MT-99.10)

TABLE 1

STATION TO STATION	ITEM 614 TEMPORARY LANE LINE CLASS II MILE	STOP LINE CLASS I LIN.FT.	GORE MARKING CLASS II LIN.FT.	CHANEL. LINE CLASS I LIN.FT.	CENTER LINE CLASS II MILE
STATE & FEDERAL					
WESTBOUND (ITEM 301)					
66+50 – 259+77.84	3.66				
WESTBOUND (ITEM 446 TYPE I)					
66+50 – 259+77.84	3.66				
CITY, STATE & FEDERAL					
WESTBOUND (ITEM 301)					
259+77.84 – 283+89.68	0.46				
10+00 – 14+23	0.08				
WESTBOUND (ITEM 446 TYPE I)					
259+77.84 – 283+89.68	0.46				
10+00 – 14+23	0.08				
STATE & FEDERAL					
RAMP A–B 24' x 2 = 48'		48			
RAMP F 35' x 2 = 70'		70			
T.R.131 35'		35			
CHERRY VALLEY RD. 36'		36			
S.R.16 @ CHERRY VALLEY RD. 58'		58			
CITY, STATE & FEDERAL					
HOWELL DRIVE 30'		30			
STATE & FEDERAL					
RAMP B 350' x 2 = 700'			700		
RAMP F 420' x 2 = 840'			840		
CITY, STATE & FEDERAL					
S.R.16 & LINE B 520'x 2 =1040'			1040		
STATE & FEDERAL					
T.R.131 LT.TURN 100' x 2 = 200'				200	
CHERRY VALLEY RD. 328'				328	
STATE & FEDERAL					
T.R.131 15'					0.01
CHERRY VALLEY RD. 71'					0.01
CIYT, STATE & FEDERAL					
HOWELL DRIVE 40'					0.01
SUB-TOTALS (CITY, STATE & FEDERAL)	1.08	30	1040		0.01
SUB-TOTALS (STATE & FEDERAL)	7.32	247	1540	528	0.02
(SUB-TOTALS CARRIED TO TABLE 3					

TABLE 2

STATION TO STATION	ITEM 614 TEMPORARY EDGE LINE CLASS I MILE WHITE	YELLOW
STATE & FEDERAL		
WESTBOUND (EXISTING PAVEMENT)		
66+50 – 259+77.84 (W)	3.66	
WESTBOUND (ITEM 301)		
66+50 – 259+77.84 (W) (Y) (Y)	3.66	7.32
WESTBOUND (ITEM 446 TYPE I)		
66+50 – 259+77.84 (Y) (W)	3.66	3.66
RAMP A & A–B 77+00 – 91+03.63 (Y) (W)	0.27	0.27
RAMP B & A–B 84+51.5 – 91+03.63 (Y) (W)	0.12	0.12
78+41.17 – 84+45 (Y) (W)	0.11	0.11
RAMP B–B 89+27 – 91+48 (Y) (W)	0.04	0.04
RAMP E 106+00 – 111+20.13 (Y) (W)	0.10	0.10
RAMP F 110+86.32 – 118+45 (Y) (W)	0.14	0.14
CHERRY VALLEY RD. 225' (W)	0.04	
CITY, STATE & FEDERAL		
WESTBOUND (EXISTING PAVEMENT)		
259+77.84 – 283+89.68 (W)	0.46	
10+00 – 14+23 (W)	0.08	
14+23 – 22+83 (Y) (W)	0.16	0.16
WESTBOUND (ITEM 301)		
259+77.84 – 283+89.68 (Y) (W) (Y)	0.46	0.92
10+00 – 14+23 (Y) (W) (Y)	0.08	0.16
WESTBOUND (ITEM 446 TYPE I)		
259+77.84 – 283+89.68 (Y) (W)	0.46	0.46
10+00 – 14+23 (Y) (W)	0.08	0.08
LINE B 271+74 – 282+50 (Y) (W)	0.20	0.20
SUB-TOTALS (CITY, STATE & FEDERAL)	1.98	1.98
SUB-TOTALS (STATE & FEDERAL)	11.80	11.76
(SUB-TOTALS CARRIED TO TABLE 4		

TABLE 3

STATION TO STATION	ITEM 614 TEMPORARY LANE LINE CLASS II MILE	STOP LINE CLASS I LIN.FT.	GORE MARKING CLASS II LIN.FT.	CHANEL. LINE CLASS I LIN.FT.	CENTER LINE CLASS II MILE
STATE & FEDERAL					
EASTBOUND (ITEM 301)					
66+50 – 259+77.84 + 300'	3.66				
EASTBOUND (ITEM 446 TYPE I)					
66+50 – 259+77.84 + 300'	3.66				
CITY, STATE & FEDERAL					
EASTBOUND (ITEM 301)					
259+77.84 – 283+89.68	0.46				
10+00 – 12+00 + 300'	0.09				
EASTBOUND (ITEM 446 TYPE I)					
259+77.84 – 283+89.68	0.46				
10+00 – 12+00 + 300'	0.09				
STATE & FEDERAL					
RAMP C 35'		35			
RAMP G 40'		40			
T.R.131 35'		35			
CHERRY VALLEY RD. 43'		43			
S.R.16 @ CHERRY VALLEY RD. 58'		58			
CITY,STATE & FEDERAL					
HOWELL DRIVE CROSSOVER 20'+13		33			
STATE & FEDERAL					
RAMP C 380' x 2 = 1140'			760		
RAMP G 350' x 2 = 1050'			700		
STATE & FEDERAL					
T.R.131 RT.TURN 119'x2=238'				238	
T.R.131 LT.TURN 101'x2=202'				202	
CHERRY VALLEY RD. RT.TURN 506'				506	
CHERRY VALLEY RD. LT.TURN 108'				108	
STATE & FEDERAL					
S.R.16 (ITEM 301)					
741+54 – 754+65					0.25
S.R.16 (ITEM 446 TYPE I)					
741+54 – 754+65 – 246'					0.20
T.R.131 60'					0.01
CHERRY VALLEY RD. 46'					0.01
CITY, STATE & FEDERAL					
LINE A–B & A (ITEM 446 TYPE I)					
263+00 – 270+87					0.15
HOWELL DRIVE CROSSOVER 44'					0.01
S.R.16 (TO RESTORE TRAFFIC AFTER CLOSURE)					0.19
SUB-TOTALS (CITY,STATE, & FEDERAL) TABLE 3	1.10	33			0.35
SUB-TOTALS (CITY, STATE & FEDERAL) TABLE 1	1.08	30	1040		0.01
TOTALS CARRIED TO GENERAL SUMMARY	2.18	63	1040		0.36
SUB-TOTALS (STATE, & FEDERAL) TABLE 3	7.32	211	1460	1054	0.47
SUB-TOTALS (STATE & FEDERAL) TABLE 1	7.32	247	1540	528	0.02
TOTALS CARRIED TO GENERAL SUMMARY	14.64	458	3000	1582	0.49

TABLE 4

STATION TO STATION	ITEM 614 TEMPORARY EDGE LINE CLASS I MILE WHITE	YELLOW
STATE & FEDERAL		
EASTBOUND (EXISTING PAVEMENT)		
66+50 – 259+77.84 (W)	3.66	
EASTBOUND (ITEM 301)		
66+50 – 259+77.84 (W) (Y) (Y)	3.66	7.32
S.R.16 741+54 – 754+65 (W) (W)	0.50	
EASTBOUND (ITEM 446 TYPE I)		
66+50 – 259+77.84 (Y) (W)	3.66	3.66
RAMP C 77+35 – 86+42.91 (Y) (W)	0.17	0.17
RAMP D–D 70' (Y) (W)	0.01	0.01
RAMP D 85+33 – 93+47 (Y) (W)	0.15	0.15
RAMP G 103+64 – 112+45 (Y) (W)	0.17	0.17
RAMP H–H 2+10 – 4+65 (Y) (W)	0.05	0.05
RAMP H 112+18 – 123+08 (Y) (W)	0.21	0.21
S.R.16 741+54 – 754+65 (W) (W)	0.50	
CHERRY VALLEY RD. 256' (W)	0.05	
CITY, STATE & FEDERAL		
EASTBOUND (EXISTING PAVEMENT)		
259+77.84 – 283+89.68 (W)	0.46	
10+00 – 12+00 (W)	0.04	
EASTBOUND (ITEM 301)		
259+77.84 – 283+89.68 (Y) (W) (Y)	0.46	0.92
10+00 – 12+00 (Y) (W) (Y)	0.04	0.08
EASTBOUND (ITEM 446 TYPE I)		
259+77.84 – 283+89.68 (Y) (W)	0.46	0.46
10+00 – 12+00 (Y) (W)	0.04	0.04
LINE A–B & A 263+00 – 270+87 (W) (W)	0.30	
LINE A 270+87 – 280+95 (Y) (W)	0.19	0.19
SUB-TOTALS (CITY, STATE & FEDERAL) TABLE 4	1.99	1.69
SUB-TOTALS (CITY, STATE & FEDERAL) TABLE 2	1.98	1.98
TOTALS (CARRIED TO GENERAL SUMMARY)	7.64	
SUB-TOTALS (STATE & FEDERAL) TABLE 4	12.79	11.74
SUB-TOTALS (STATE & FEDERAL) TABLE 2	11.80	11.76
TOTALS (CARRIED TO GENERAL SUMMARY)	48.09	

DRAINAGE SUB-SUMMARY

ITEM	STATE AND FEDERAL SHEET NUMBER 30	76	77	78	79	80	83	84	85	86	87	88	CITY, STATE AND FEDERAL SHEET NUMBER 76	77	78	79	80	89	PARTICIPATION STATE & FEDERAL SUB-TOTAL	CITY, STATE & FEDERAL SUB-TOTAL	ITEM	UNIT	DESCRIPTION
603		58	25	26	19	4								7	4	4			132	15	603	LIN.FT.	6" CONDUIT, TYPE F, 707.15
603		404	425	660	450	175	101	154		77	62	32	38	62	64	82	106	49	2540	401	603	LIN.FT.	6" CONDUIT TYPE F, 707.17 NON-PERFORATED, ASTM 3034, SDR 35, OR S.S. 931
603						16													16		603	LIN.FT.	6" CONDUIT TYPE B, 707.17 NON-PERFORATED, ASTM 3034, SDR 35, OR S.S. 931
603	13																		13		603	LIN.FT.	12" CONDUIT, TYPE C, 706.02
603									50	229									279		603	LIN.FT.	15" CONDUIT, TYPE C
603	7																		7		603	LIN.FT.	24" CONDUIT, TYPE B
604	1																		1		604	EACH	CATCH BASIN, NO. 5, AS PER PLAN
604	1				1				1								3		3	3	604	EACH	CATCH BASIN, NO. 8, AS PER PLAN
604	1																		1		604	EACH	MANHOLE, NO.1
604										1									1		604	EACH	MANHOLE NO. 3 WITH HEAVY DUTY FRAME AND COVER
604	1	1		4	2	1				1				1		1			10	2	604	EACH	CATCH BASIN RECONSTRUCTED TO GRADE, AS PER PLAN
604		1	1		14											1			16	1	604	EACH	CATCH BASIN RECONSTRUCTED TO GRADE, AS NO. 8, AS PER PLAN
604	1									1	1								3		604	EACH	MANHOLE ADJUSTED TO GRADE WITH HEAVY DUTY FRAME AND COVER
604						1													1		604	EACH	INLET NO. 2-6
604						1													1		604	EACH	INLET NO. 2-8
605	210																		210		605	LIN.FT.	AGGREGATE DRAINS
605		14426	15134	18499	16647	6707							1472	2243	2462	1838	2435		71413	10450	605	LIN.FT.	SHALLOW UNDERDRAINS, AS PER PLAN
605									900	684	100								1684		605	LIN.FT.	6" SHALLOW PIPE UNDERDRAINS, AS PER PLAN
605							3124	1462	1100	1152	2270	457						228	9565	228	605	LIN.FT.	6" UNCLASSIFIED PIPE UNDERDRAINS, AS PER PLAN
605								68										50	68	50	605	LIN.FT.	6" UNCLASSIFIED PIPE UNDERDRAINS, 707.17, AS PER PLAN
SPECIAL		20		26		10	2						1	2	4		3	3	58	13	SPECIAL	EACH	PRECAST REINFORCED CONCRETE OUTLET
605				495															495		605	LIN.FT.	SHALLOW UNDERDRAINS, AS PER PLAN, USING MONSANTO HYDRAWAY
605		495																	495		605	LIN.FT.	SHALLOW UNDERDRAINS, AS PER PLAN, USING CONTECH STRIPDRAIN 100
605		495																	495		605	LIN.FT.	SHALLOW UNDERDRAINS, AS PER PLAN, USING ADS ADVANEDGE
605				495															495		605	LIN.FT.	SHALLOW UNDERDRAINS, AS PER PLAN, USING 4" PIPE UNDERDRAINS
SPECIAL		6		6															12		SPECIAL	EACH	OBSERVATION RISER
SPECIAL		990		990															1980		SPECIAL	LIN.FT.	SAWING

QUANTITIES CARRIED TO GENERAL SUMMARY SHEET 26

ITEM 605 – SHALLOW UNDERDRAIN AS PER PLAN

CALC. BY	LIC-37-15.61	OHIO	74
DATE 1/4/89	LIC-16-14.26	FHWA REGION 5	123
CHKD. BY JWC			
DATE 1/25/89			

DESCRIPTION: THE ITEM SHALL CONSIST OF FURNISHING AND INSTALLING A PIPE UNDERDRAIN SYSTEM OR PREFABRICATED EDGE DRAIN SYSTEM IN ACCORDANCE WITH THE SPECIFICATIONS, DETAILS AS SHOWN ON THE PLANS, AND AS DIRECTED BY THE ENGINEER.

MATERIALS: THE UNDERDRAIN SHALL BE A PIPE UNDERDRAIN SYSTEM PER ITEM 605 OR A PREFABRICATED EDGE DRAIN SYSTEM MEETING THE FOLLOWING REQUIREMENTS. THE PREFABRICATED EDGE DRAIN SHALL CONSIST OF A POLYMERIC CORE WITH A MINIMUM THICKNESS OF ONE INCH WRAPPED IN FABRIC MEETING 712.09 TYPE A. THE DRAIN SHALL BE FLEXIBLE, RECTANGULAR IN SHAPE AND OF HOLLOW CONSTRUCTION. THE CORE MATERIAL SHALL BE RESISTANT TO PETROLEUM BASED CHEMICALS, NATURAL OCCURING SOIL CHEMICALS, AND ROAD DE-ICING AGENTS.

THE CORE SHALL PROVIDE A MINIMUM OF 100 SQUARE INCHES UNOBSTRUCTED (ONE SIDE ONLY) DRAINAGE AREA PER FOOT OF WIDTH. SIDE WALLS OF THE CORE SHALL PROVIDE AT LEAST 5% OPEN AREA TO PERMIT UNOBSTRUCTED FLOW THROUGH THE FILTER AND WALL TO THE CORE.

THE PREFABRICATED EDGE DRAIN SHALL HAVE A MINIMUM COMPRESSIVE STRENGTH OF 6000 POUNDS PER SQUARE FOOT WITH A MAXIMUM 20% COMPRESSION IN A PARALLEL PLATE COMPRESSION TEST (ASTM-D 695). THE MINIMUM (SINGLE SIDE) CORE FLOW CAPACITY SHALL BE 10 GALLONS PER MINUTE PER FOOT OF WIDTH FOR A 0.1 GRADIENT AT 10 POUNDS PER SQUARE INCH BLADDER LOAD PER ASTM D 4716.

IN LIEU OF THE ABOVE REQUIREMENTS THE FOLLOWING PRODUCTS ARE ACCEPTABLE PRE-FABRICATED EDGE DRAINS:

HYDRAWAY DRAIN BY MONSANTO COMPANY
PDS 25 BY PRODRAIN SYSTEMS
STRIP DRAIN 100 BY CONTECH CONSTRUCTION PRODUCTS, INC.

CONSTRUCTION: THE PREFABRICATED EDGE DRAIN SHALL BE INSTALLED IN A TRENCH AS SHOWN ON THE PLANS AND IN ACCORDANCE WITH THE MANUFACTURER'S RECOMMENDATIONS. THE TRENCH SHALL BE BACKFILLED WITH THE EXCAVATED TRENCH MATERIAL PLACED IN TWO (2) LAYERS AND EACH LAYER COMPACTED TO A DENSITY OF NOT LESS THAN 90% OF THE MAXIMUM DRY WEIGHT DENSITY. THE FIRST LAYER OF THE BACKFILL MATERIAL SHALL BE PLACED SIMULTANEOUSLY WITH THE TRENCHING OPERATION TO HOLD THE EDGE DRAIN FLUSH AGAINST THE TRENCH WALL.

THE PREFABRICATED EDGE DRAIN SHALL BE SPLICED AS REQUIRED PRIOR TO PLACEMENT IN THE TRENCH, USING MATERIAL FURNISHED BY THE MANUFACTURER AND IN ACCORDANCE WITH THE MANUFACTURER'S DIRECTIONS. ALL MATERIAL REQUIRED FOR THE SPLICES WILL BE SUPPLIED BY THE MANUFACTURER, BUT ANY EQUIPMENT REQUIRED SHALL BE FURNISHED BY THE CONTRACTOR.

THE UNDERDRAIN OUTLETS SHALL BE PLACED IN ACCORDANCE WITH ITEM 603 AS DIRECTED BY THE ENGINEER, USING OUTLET FITTINGS. THE MANUFACTURER SHALL SUPPLY OUTLET FITTINGS WHICH WILL MAKE THE TRANSITION BETWEEN THE PREFABRICATED EDGE DRAIN AND A STANDARD 6" DIAMETER PIPE. FITTINGS SHALL BE INSTALLED AS RECOMMENDED BY THE MANUFACTURER.

THE OUTLETS FOR THE UNDERDRAIN SYSTEM SHALL BE CONSTRUCTED AS SOON AS POSSIBLE AFTER PLACEMENT OF THE UNDERDRAIN. THE OUTLETS ON CRACK & SEAT PROJECTS SHALL BE IN PLACE AND FUNCTIONAL PRIOR TO CRACKING AND SEATING THE EXISTING PAVEMENT.

METHOD OF MEASUREMENT: COMPLETED AND ACCEPTED UNDERDRAINS WILL BE MEASURED BY THE LINEAR FOOT IN PLACE.

BASIS OF PAYMENT: WORK COMPLETED AND ACCEPTED UNDER THIS ITEM AND MEASURED WILL BE PAID FOR AT THE CONTRACT UNIT PRICE BID PER LINEAR FOOT FOR ITEM 605 – SHALLOW UNDERDRAIN, AS PER PLAN, WHICH PRICE SHALL BE FULL COMPENSATION FOR EXCAVATION AND BACKFILL; FOR FURNISHING MATERIALS, INCLUDING MATERIAL FOR SPLICES: OUTLET FITTINGS AND ITEM 301; FOR ALL LABOR, TOOLS, EQUIPMENT, AND INCIDENTALS NECESSARY TO COMPLETE THE WORK.

ITEM SPECIAL – PRECAST REINFORCED CONCRETE OUTLET

THE CONCRETE OUTLET SHALL MEET THE REQUIREMENTS OF ITEM 604 IN THE CONSTRUCTION & MATERIALS SPECIFICATIONS. PAYMENT SHALL BE MADE ON AN EACH BASIS. PAYMENT SHALL INCLUDE THE COST OF THE SOD.

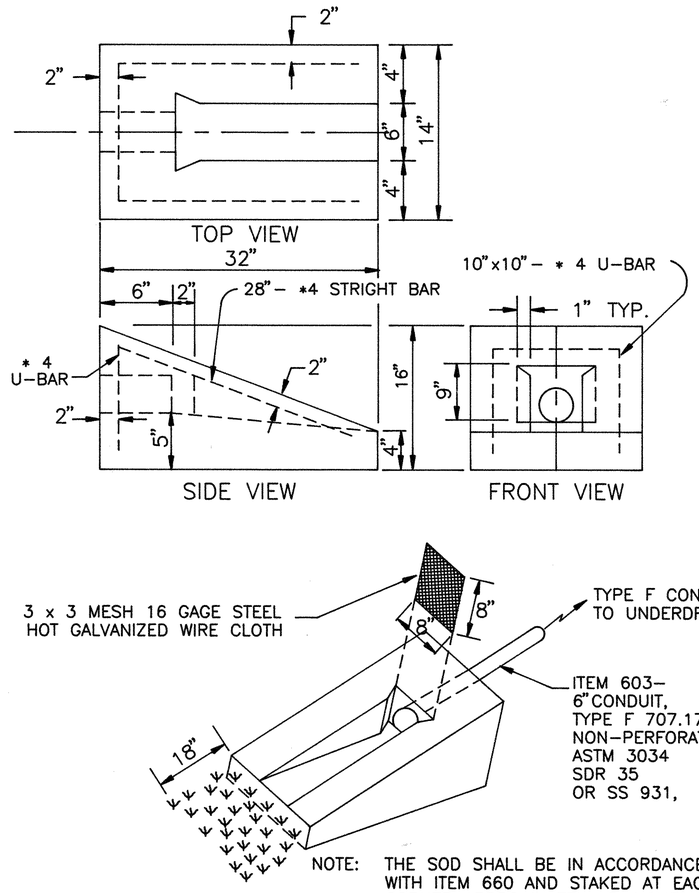

NOTE: THE SOD SHALL BE IN ACCORDANCE WITH ITEM 660 AND STAKED AT EACH CORNER APPROXIMATELY 3 INCHES IN FROM THE EDGE.

OUTLET DETAIL (A)

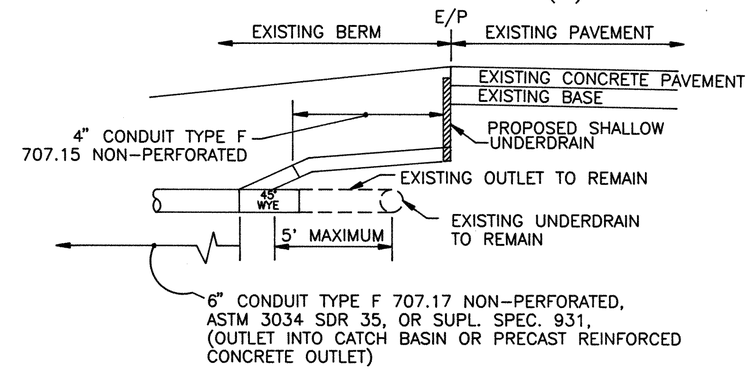

NOTE: THE COST OF THE 4" CONDUIT TYPE F 707.15 NON-PERFORATED, AND NECESSARY PIPE BENDS AND BRANCHES NEEDED TO CONNECT THE EXISTING AND PROPOSED UNDERDRAINS SHALL BE INCLUDED WITH THE COST OF THE 6" CONDUIT TYPE F BEYOND THE EXISTING UNDERDRAIN.

TYPICAL OUTLET (B)

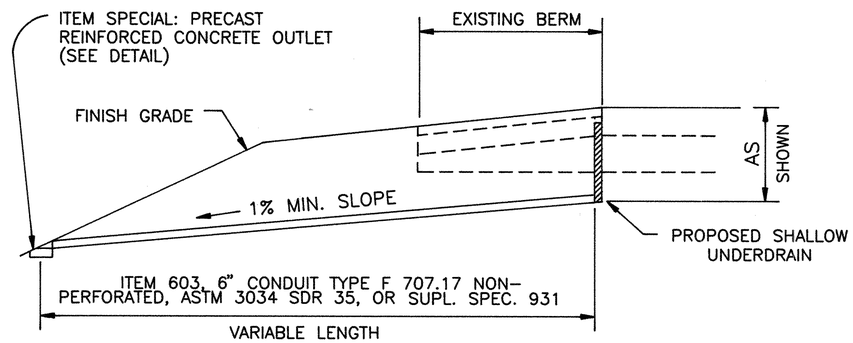

NOTE: FOR UNDERDRAIN OUTLETS INTO CATCH BASINS THE ABOVE TYPE F CONDUIT SHALL BE USED ENTIRELY BETWEEN THE UNDERDRAIN & CATCH BASIN.

PIPE UNDERDRAIN SYSTEM

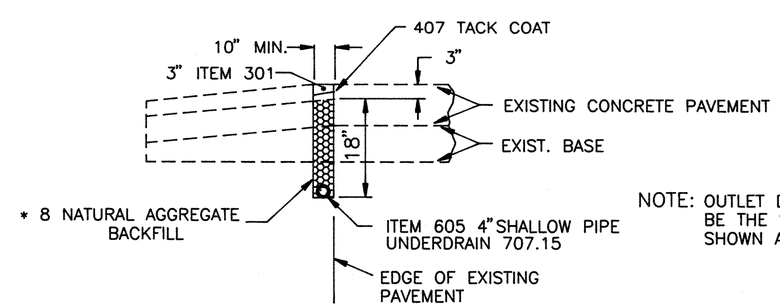

NOTE: OUTLET DETAILS TO BE THE SAME AS SHOWN ABOVE.

PREFABRICATED EDGE DRAIN SYSTEM

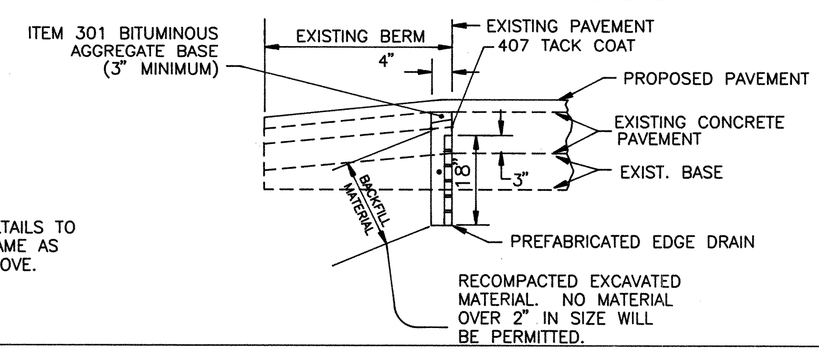

605SHAUD (A) STD. 1/9/89

LIC-37-15.61
LIC-16-14.26

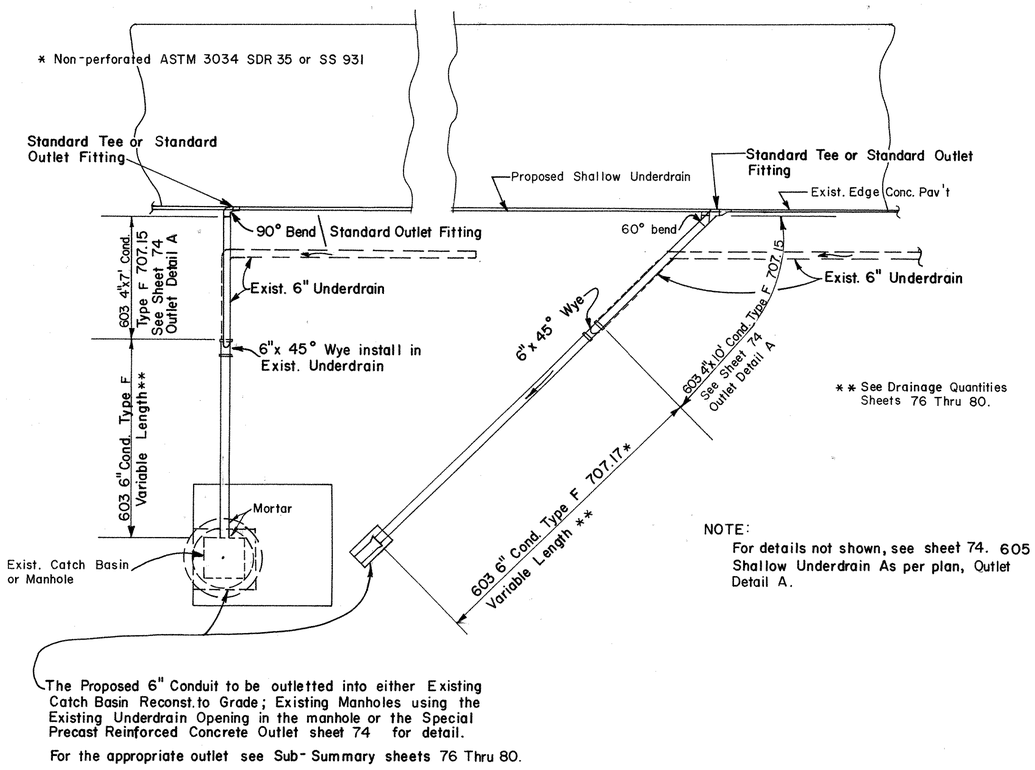

NOTE:
For details not shown, see sheet 74. 605 Shallow Underdrain As per plan, Outlet Detail A.

The Proposed 6" Conduit to be outletted into either Existing Catch Basin Reconst. to Grade; Existing Manholes using the Existing Underdrain Opening in the manhole or the Special Precast Reinforced Concrete Outlet sheet 74 for detail.

For the appropriate outlet see Sub-Summary sheets 76 Thru 80.

SPECIAL OUTLET III

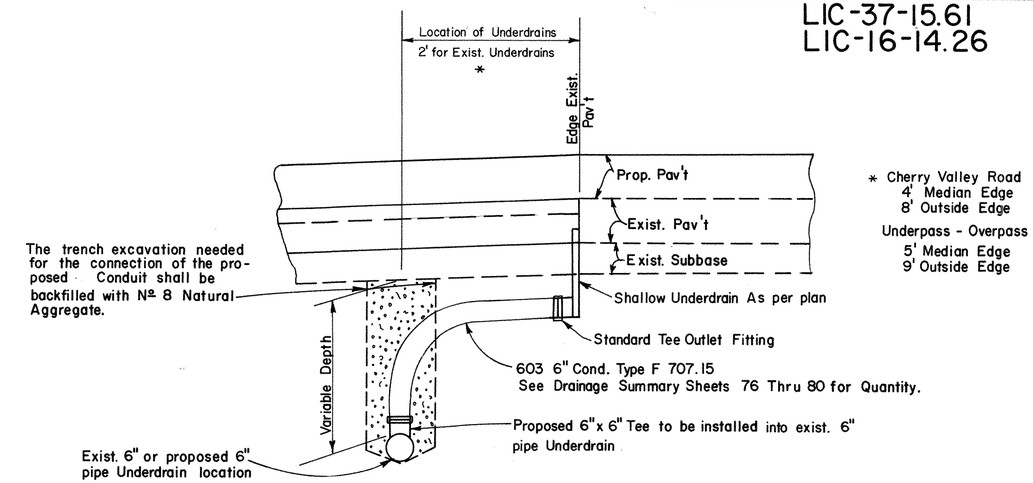

SPECIAL OUTLET III

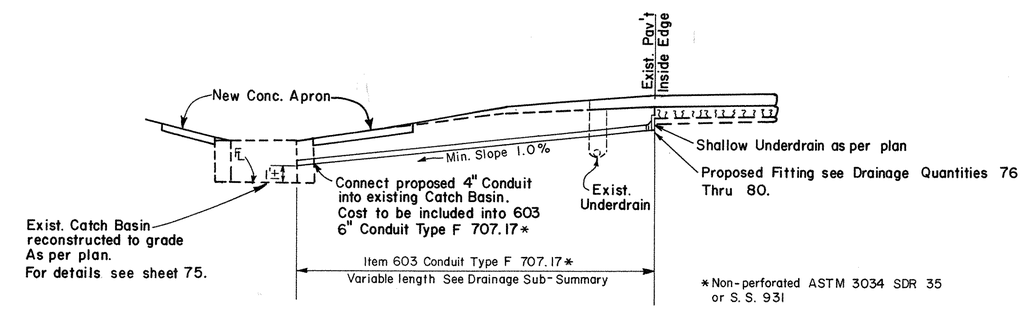

SPECIAL OUTLET IV

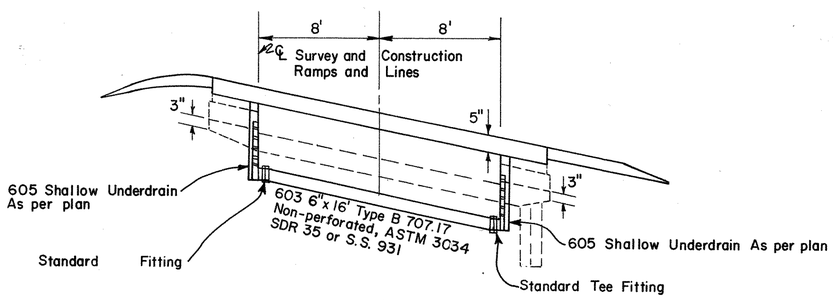

SPECIAL OUTLET V

CATCH BASIN NOS. & NO. 8 AS PER PLAN
Concrete apron shown here will be constructed. For other details see std Drawings CB-5 & CB-8

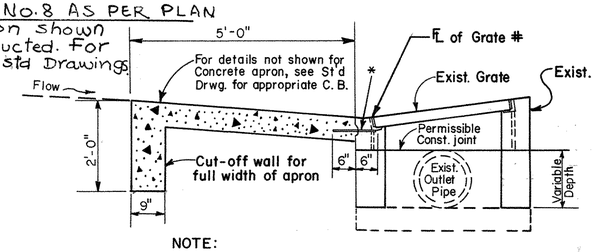

* 5/8" o x 12" Dowel bars as per 709.01, 709.03 or 709.05 in inserts or in holes drilled as per item 510. The Dowel bars shall be at 18" spacing.

NOTE:
The ℄ Elev. of the grate of the Reconstructed Catch Basin shall be the existing ditch elevation as determined by the Project Engineer.

NOTE:
For details not shown see Standard Drawing C.B. 5 or C.B. 8.

CATCH BASIN RECONSTRUCTED TO GRADE, AS PER PLAN

The requirements of item 604 shall govern the reconstruction of the existing Catch Basin. The work shall also include the removal and disposal of the existing concrete apron and the subsequent replacement of the existing concrete apron as shown here and in the Standard Drawing for the pertinent Catch Basin.

Payment for the above work shall be included in the price bid for each Catch Basin under item 604 Catch Basin Reconstructed to Grade as per plan and shall constitute full compensation for furnishing all material, labor, tools and equipment, and all incidentals.

605 SHALLOW UNDERDRAIN AS PER PLAN DRAINANGE QUANTITIES

CALC. BY	RSJ
DATE	1/23/89
CHKD. BY	JWC
DATE	1/23/89

OHIO

FHWA REGION 5

76 / 123

LIC-37-15.61
LIC-16-14.26

NOTE: For details of Special Outlets II and III, see sheet 75

* NOTE: For details see Typical Outlet Detail B sheet 74

NOTE: For Ramp A Quantities, See sheet 80

■ NOTE: For Catch Basin Reconstructed to Grade As Per Plan, see sheet 75.

WEST BOUND LANES STATIONING	SHALLOW UNDERDRAIN OUTLETS			605 SHALLOW UNDERDRAIN AS PER PLAN		604 ■ CATCH BASIN RECONSTRUCTED TO GRADE, AS NO. 8 AS PER PLAN		604 ■ CATCH BASIN RECONSTRUCTED TO GRADE, AS PER PLAN		603 6" CONDUIT, TYPE F, 707.17 NON-PERFORATED ASTM 3034 SDR 35 OR SS 931		STD. OUTLET FITTING		STD. TEE FITTING		STD. END CAP		603 6" CONDUIT, TYPE F, 707.15		SPECIAL PRECAST REINFORCED CONCRETE OUTLET		BENDS AND BRANCHES								EXISTING CATCH BASIN DEPTH	605				SPECIAL OBSERVATION RISER	SPECIAL SAWING
	STATION	TYPE	EXIST. C.B.	LIN. FT.		EACH		EACH		LIN. FT.		EACH		EACH		EACH		LIN. FT.		EACH		6"x4"-45°WYE		6"x6" TEE		6"x90°		6"x60"			SHALLOW UNDERDRAIN AS PER PLAN USING STRIPDRAIN 100 LIN. FT.		SHALLOW UNDERDRAIN AS PER PLAN USING ADS ADVANEDGE LIN. FT.		EACH	LIN. FT.
OUTSIDE EDGE				S-F	C-S-F	S-F	C-S-F	S-F	C-S-F	S-F	C-S-F	S-F	C-S-F	S-F	C-S-F	S-F	C-S-F	S-F	C-S-F	S-F	C-S-F	S-F	C-S-F	S-F	C-S-F	S-F	C-S-F	S-F	C-S-F		S-F	C-S-F	S-F	C-S-F	S-F	S-F
67+00 - 75+14.94 ℳ =																																					
75+14.94 RAMP A				815												1																					
	72+00	*B								16				1						1																	
77+25 - 83+00				575												1																					
	83+00	*B								24		1								1						1											
91+12 /104+40 ℳ =																																					
104+40 RAMP E / 110+																																					
70 RAMP E				1958												1																					
	91+12	III										1						11						1		1											
	95+00	*B								20				1						1																	
	100+00	*B								16				1						1																	
BREAK IN GRADE	104+00																																				
SAG	107+50 RAMP E	*B								24				1						1																	
111+40 RAMP F /121+00 RAMP																																					
F =121+00 ℳ /141+49				3009												1																					
	116+00 RAMP F	*B								18				1						1																	
OUTLET INTO C.B. STA. 122+00	121+89 ℳ	II								18				1								1						1									
	122+00		2-2A/NO. 8 TOP			1																								3.0'±							
	127+00	III												1				7						1													
	132+00	III												1				7						1													
	137+00	III												1				7						1													
	141+49	II	OUTLET IN C.B. TR131							24		1										1						1									
23' RT. STA. 7+00, TWP. RD. 131	7+00 T.R.131		NO. 8					1																						3.0'±							
*** 142+75 - 147+00	147+00	*B		425						18		1				1				1						1											
*** 147+05 - 152+00	152+00	*B								25		1				1				1**						1					495				3	495
*** 152+05 - 153+00	153+00	II		95						18		1				1				1		1				1											
*** 153+05 - 158+00	158+00	*B								25		1				1				1**						1							495		3	495
*** 158+05 - 162+62(SAG)	159+25	II		457						18				1		2				1		1															
167+45 - 179+58				1213												1																					
	167+45	III										1						11						1		1											
	174+00	II								14				1						1		1															
184+47 - 218+98				3451												1																					
	189+00	*B								16				1						1																	
	194+00	*B								16				1						1																	
	199+00	*B								16				1						1																	
	204+00	*B								16				1						1																	
	209+00	*B								16				1						1																	
	214+00	II								14				1						1		1															
	218+98											1																									
235+50 - 259+77.84																																					
# STA. 259+77.84 # 259+77.84 ℳ - 259+95.70 ℳ =				2428												1																					
BEGIN CITY-STATE-FEDERAL 259+95.70 LINE W - 275+00 LINE W					1472																																
	242+00	III												1				5						1													
	247+25	III												1				5						1													
	247+75	III												1				5						1													
	253+50	*B								16				1						1																	
	258+50	*B								16				1						1																	
LINE W	264+00	II									18				1						1		1														
BREAK IN GRADE	271+37.5																																				
LINE W	275+00	*B									20		1														1										
SUB-TOTAL STATE-FEDERAL				14426		1		1		404		9		22		13		58		20		6		8		7		2			495		495		6	990
SUB-TOTAL CITY-STATE-FEDERAL					1472						38		1		1						1		1				1										

QUANTITIES CARRIED TO SHEET 73

** OUTLETS TO BE PROVIDED BUT NOT INSTALLED

*** SEE GENERAL NOTE EDGE DRAIN RESEARCH SHEET 5A.

NOTE: For details of Special Outlets II, III, and IV, see sheet 75.

* NOTE: For details see Typical Outlet B Detail sheet 74.

★ NOTE: For Catch Basin Quantities see sheet 79.

■ NOTE: For details of Catch Basin Reconstructed to Grade As Per Plan, see sheet 75.

605 SHALLOW UNDERDRAIN AS PER PLAN DRAINAGE QUANTITIES

CALC. BY RCJ DATE 1/19/89
CHKD. BY JMC DATE 1/25/89

OHIO
FHWA REGION 5

77
123

LIC-37-15.61
LIC-16-14.26

WEST BOUND LANES STATIONING	SHALLOW UNDERDRAIN OUTLET STATION	TYPE	OUTLET INTO C.B.	605 SHALLOW UNDERDRAIN AS PER PLAN LIN. FT. S-F	C-S-F	604 ■ CATCH BASIN RECONSTRUCTED TO GRADE, AS NO.8 AS PER PLAN EACH S-F	C-S-F	604 ■ CATCH BASIN RECONSTRUCTED TO GRADE, AS PER PLAN EACH S-F	C-S-F		603 6" CONDUIT, TYPE F, 707.17 NON-PERFORATED ASTM 3034 SDR 35 OR SS 931 LIN. FT. S-F	C-S-F	STD. OUTLET FITTING EACH S-F	C-S-F	STD. TEE FITTING EACH S-F	C-S-F	STD. END CAP EACH S-F	C-S-F	603 6" CONDUIT, TYPE F, 707.15 LIN. FT. S-F	C-S-F	SPECIAL PRECAST REINFORCED CONCRETE OUTLET EACH S-F	C-S-F	BENDS AND BRANCHES 6"x4"-45°WYE S-F	C-S-F	6"x6" TEE S-F	C-S-F	6"x90° S-F	C-S-F	6"x60° S-F	C-S-F	6"x45° S-F	C-S-F	EXISTING CATCH BASIN DEPTH
MEDIAN EDGE																																				
67+00 - 83+64				1664														1																		
	72+09	II	72+25 ℄ ★								21				1							1								1						
	79+59	II	79+75 ℄ ★								21				1							1								1						
	83+64	II	83+80 ℄ ★								21		1									1								1						
91+12 - 107+82				1670																																
	91+12	III											1							7						1		1								
	92+66	II	92+50 ℄ ★								21				1							1								1						
	98+50	III													1					4						1										
BREAK IN GRADE	104+00																																			
	107+82	III											1							5						1		1								
115+30 - 141+68				2638														1																		
	121+77	II	M.H. 122+00								37				1							1								1						
OUTLET INTO C.B. STA. 127+00	127+00	IV	2-2A/NO. 8 TOP			1					24				1																					3.0'±
	131+78	II	M.H. 132+00								37				1							1								1						
OUTLET INTO PROP. C.B. STA. 140+00	140+00	IV	NO. 8 (PROPOSED)								24				1																					
OUTLET INTO C.B. ℄ STA 141 96' Sheet 30	141+68	IV	141+96 ℄								34				1																	1				
143+00 - 162+85				1985														2																		
	152+84	II	153+00 ℄ ★								21				1							1								1						
	159+25	II	159+25 ℄ ★								18				1							1														
167+15 - 180+07				1292														1																		
	167+15	III											1							5						1		1								
	168+00	IV	174+00 ℄ ★								24		1																	1						
	174+13	II									21				1							1								1						
184+41 - 218+98				3457														1																		
	192+91	II	193+00 ℄ ★								21				1							1								1						
	202+91	II	203+00 ℄ ★								21				1							1								1						
	209+00	III													1					4						1										
	215+37	II	215+50 ℄ ★								21				1							1								1						
	218+98												1																							
235+50 - 259+77.84/				2428														1																		
STA. 259+77.84 259+77.84 M -259+95.70					1585																															
BEGIN CITY-STATE-FEDERAL M = 259+95.70 LINE W-																																				
275+63 LINE W																																				
	242+00	IV	M.H. 242+00								10				1																					
SAG	247+50	II	247+50 ℄ ★								4				1							1														
	250+00	IV	250+00 ℄ ★								24				1																					
LINE W RT.	260+16	II	260+00 ℄ ★									21				1									1						1					
LINE W RT.	266+50	* B										24				1					1															
LINE W RT. BREAK IN GRADE	271+37.5																																			
LINE W RT.	275+63	III												1					7								1									
LINE W RT.	279+08		2-2B RT						1																											3.0'±
LINE W 280+27 /283+89.68																																				
= 10+00 /12+70.32					658												1																			
LINE W RT.	12+70.32	* B										17		1							1								1						
SUB-TOTAL STATE-FEDERAL				15134		1					425		6		19		7		25			13		5		3		12		1					
SUB-TOTAL CITY-STATE-FEDERAL					2243				1			62		2		2		1		7	2		1		1		1		1						

L016330-B

QUANTITIES CARRIED TO SUB-SUMMARY SHEET 73

605 SHALLOW UNDERDRAINS AS PER PLAN DRAINAGE QUANTITIES

CALC. BY	RSB
DATE	11/29/89
CHKD. BY	JWC
DATE	11/29/89

OHIO

FHWA REGION 5

LIC-37-15.61
LIC-16-14.26

NOTE: FOR DETAILS OF SPECIAL OUTLET II, III, AND IV, SEE SHEET 75

*NOTE: FOR DETAILS SEE TYPICAL OUTLET B DETAIL SHEET 74

EAST BOUND LANES STATIONING	SHALLOW UNDERDRAIN OUTLET			605 SHALLOW UNDERDRAIN AS PER PLAN		604 CATCH BASIN RECONSTRUCTED TO GRADE, AS PER PLAN		603 6" CONDUIT, TYPE F, 707.17 NON-PERFORATED ASTM 3034 SDR 35 OR SS 931		STD. OUTLET FITTING		STD. TEE FITTING		STD. END CAP		603 6" CONDUIT, TYPE F, 707.15		SPECIAL PRECAST REINFORCED CONCRETE OUTLET		BENDS AND BRANCHES								EXISTING CATCH BASIN DEPTH	605		SPECIAL OBSERVATION RISER	SPECIAL SAWING
																				6"x4"-45°WYE		6"x6" TEE		6"x90°		6"x60"			SHALLOW UNDERDRAIN AS PER PLAN USING MONSANTO HYDRAWA	SHALLOW UNDERDRAIN AS PER PLAN USING 4" PIPE UNDERDRAIN		
OUTSIDE EDGE	STATION	TYPE	EXIST. C.B.	LIN. FT.		EACH		LIN. FT.		EACH		EACH		EACH		LIN. FT.		EACH											LIN. FT.	LIN. FT.	EACH	LIN. FT.
67+00 ℳ -(73+73.37 ℳ =				S-F	C-S-F	S-F	C-S-F	S-F	C-S-F	S-F	C-S-F	S-F	C-S-F	S-F	C-S-F	S-F	C-S-F	S-F	C-S-F	S-F	C-S-F	S-F	C-S-F	S-F	C-S-F	S-F	C-S-F		S-F	S-F	S-F	S-F
73+73.37 RAMP C)- 85+93 RAMP C				1893										2																		
	72+00	* B						20				1						1														
SAG	78+50 RAMP C	* B						22				1						1														
	82+00 RAMP C	* B						16				1						1														
78+40 ℳ - 92+60 ℳ				1420										2																		
(OUTLET INTO C.B. 83+80)	83+67	II						18				1								1						1						
SAG	83+80		2-2A/NO. 5 TOP			1																						4.1'±				
(OUTLET INTO C.B. 83+80)	83+93	II						18				1								1						1						
	88+45	II						18				1						1		1												
87+75 RAMP D-95+08.92																																
RAMP D= 95+08.92 ℳ- 100																																
+70 ℳ=100+70 RAMP G -																																
111+95 RAMP G				2420										2																		
(OUTLET INTO C.B. 92+55)	92+42 RAMP D	II						20				1								1						1						
SAG	92+55 RAMP D		NO. 8			1																						3.9'±				
(OUTLET INTO C.B. 92+55)	92+66 RAMP D	II						20				1								1						1						
	95+00	* B						20				1						1														
BREAK IN GRADE 102+75 RAMP G																																
SAG	104+00 RAMP G	III										1				4						1										
	108+00 RAMP G	III										1				4						1										
104+75 - 121+89 ℳ				1714										1																		
	110+00	III										1				6						1										
	116+00	III										1				6						1										
(OUTLET INTO C.B. 122+00)	121+89	II						20		1										1						1						
	122+00		2-2A/NO. 8 TOP			1																						3.8'±				
2+60 RAMP H-H(4+65 RAMP																																
H-H= 114+32 RAMP H)														1																		
(127+75.21 RAMP H=																																
127+75.21 ℳ)- 141+96 ℳ				2969										1																		
	118+00 RAMP H	II						32				1						1		1												
	126+00	* B						24				1						1														
(OUTLET INTO C.B. 132+00)	131+74	II						41				1								1						1						
	132+00		NO. 8			1																						3.3'±				
	137+00	III										1				6						1										
(OUTLET INTO M.H. 141+96)	141+96	IV						22		1														1								
*** 143+25 - 146+74	146+74	II		349				25		1				1				1		1						1						
*** 147+05 - 152+00	152+00	* B						25		1				1				1**						1						495	3	495
*** 152+05 - 152+95	152+95	II		90				18		1				1				1		1				1								
*** 153+05 - 158+00	158+00	* B						25		1				1				1**						1					495		3	495
*** 158+05 - 159+20	159+20	II		115				18		1				1				1		1				1								
*** 159+30 - 162+70	159+30	II		340				18		1				1				1		1				1								
167+00 - 180+74				1374										1																		
	167+00	* B						16		1								1						1								
	170+50	* B						16				1						1														
	175+00	* B						16				1						1														
185+11 - 218+98				3387										1																		
	189+00	* B						16				1						1														
	194+00	* B						16				1						1														
	199+00	* B						16				1						1														
	204+00	* B						16				1						1														
	209+00	* B						16				1						1														
	214+00	* B						20				1						1														
	218+98									1																						
STA. 259+77.84 BEGIN CITY-STATE-FEDERAL 235+50 - 259+77.84				2428																												
259+77.84 - 283+89.68																																
B= 10+00 A - 10+50					2462									1																		
	241+50	* B						20				1						1														
SAG	247+50	* B						20				1						1														
	251+50	* B						16				1						1														
	256+50	* B						16				1						1														
	261+50	* B							16				1						1													
BREAK IN GRADE	266+50																															
	273+00	III											1				4						1									
	278+00	* B							16				1						1													
	283+00	* B							16				1						1													
	10+50	* B							16		1								1						1							
TOTAL STATE-FEDERAL				18499		4		660		10		29		18		26		26		12		5		7		7			495	495	6	990
TOTAL CITY-STATE-FEDERAL					2462				64		1		4				4		4				1		1							

L01633A-B

QUANTITIES CARRIED TO SUB-SUMMARY SHEET 73

** OUTLETS TO BE PROVIDED BUT NOT INSTALLED

*** SEE GENERAL NOTE EDGEDRAIN RESEARCH SHEET 5A.

LIC-37-15.61
LIC-16-14.26

605 SHALLOW UNDERDRAINS AS PER PLAN DRAINAGE QUANTITIES

* NOTE: For as per plan, see Catch Basin Reconstruction to Grade, As Per Plan Concrete Apron Detail See Sheet 75.
NOTE: For details of Special Outlet II, III, and IV, see sheet 75.
■ NOTE: For Catch Basin Reconstructed to grade, as per plan, see sheet 75.

NOTE: For further information see sheet 83.

EAST BOUND LANES	SHALLOW UNDERDRAIN OUTLET			605 SHALLOW UNDERDRAIN AS PER PLAN		604 ■ CATCH BASIN RECONSTRUCTED TO GRADE, AS NO. 8 AS PER PLAN		604 ■ CATCH BASIN RECONST. TO GRADE AS PER PLAN		604 * NO. 8 CATCH BASIN AS PER PLAN				603 6" CONDUIT, TYPE F, 707.17 NON-PERFORATED ASTM 3034 SDR 35 OR SS 931		STD. OUTLET FITTING		STD. TEE FITTING		STD. END CAP		603 6" CONDUIT, TYPE F, 707.15		EXISTING CATCH BASIN DEPTH	BENDS AND BRANCHES							
STATIONING	STATION	TYPE	EXIST. C.B.	LIN. FT.		EACH		EACH		EACH				LIN. FT.		EACH		EACH		EACH		LIN. FT.			6"x4"-45°WYE		6"x6" TEE		6"x90°		6"x60°	
MEDIAN EDGE				S-F	C-S-F	S-F	C-S-F	S-F	C-S-F	S-F	C-S-F			S-F	C-S-F	S-F	C-S-F	S-F	C-S-F	S-F	C-S-F	S-F	C-S-F		S-F	C-S-F	S-F	C-S-F	S-F	C-S-F	S-F	C-S-F
67+00 - 141+87				7487																1												
OUTLET INTO C.B. 72+25	72+09	II												21				1							1						1	
	72+25	RECONST	2-2A/NO. 8 TOP			1																		2.5'±								
OUTLET INTO C.B. 79+75	79+59	II												21				1							1						1	
	79+75	RECONST	2-2A/NO. 8 TOP			1																		2.5'±								
OUTLET INTO C.B. 83+80	83+64	II												21				1							1						1	
SAG	83+80	RECONST	2-2A/NO. 8 TOP			1																		4.7'±								
OUTLET INTO C.B. 83+80	83+96	II												21				1							1						1	
	89+52	IV	REPLACE 2-2B							1 #				24				1						1.7'±								
OUTLET INTO C.B. 92+50	92+66	II												21				1							1						1	
	92+50	RECONST	NO. 8					1																5.2'±								
	97+00	III																1				4					1					
BREAK IN GRADE	104+00																															
	109+94	IV	2-2A/NO. 8 TOP			1#								24				1						2.6'±								
	117+00	IV	RECONST NO. 8					1 #						24				1						6.0'±								
OUTLET INTO MANHOLE 122+00	121+94	II	14'RT. MANHOLE											5				1							1						1	
OUTLET INTO MANHOLE 127+00	127+94	II	14'RT. MANHOLE											5				1							1						1	
OUTLET INTO MANHOLE 132+00	131+94	II	14'RT. MANHOLE											5				1							1						1	
OUTLET INTO MANHOLE 137+00	137+00	IV	14'RT. MANHOLE											5				1														
OUTLET INTO MANHOLE 141+96	141+87	II	14'RT. MANHOLE											6		1									1						1	
143+00 - 162+75				1975																2												
OUTLET INTO MANHOLE 147+00	146+94	II	14'RT. MANHOLE											5				1							1						1	
OUTLET INTO C.B. 153+00	152+84	II												21				1							1						1	
	153+00	RECONST	2-2A/NO. 8 TOP			1																		3.0'±								
OUTLET INTO C.B. 159+25	159+09	II												21				1							1						1	
SAG	159+25	RECONST	2-2A/NO. 8 TOP			1																		2.7'±								
OUTLET INTO C.B. 159+25	159+41	II												21				1							1						1	
167+05 - 180+53				1348																1												
	167+05	III														1						7					1		1			
OUTLET INTO C.B. 168+00	168+14	II												21				1							1						1	
	168+00	RECONST	2-2A/NO. 8 TOP			1																		2.6'±								
OUTLET INTO C.B. 174+00	174+13	II												21				1							1						1	
	174+00	RECONST	2-2A/NO. 8 TOP			1																		2.5'±								
184+89 - 218+98				3409																1												
OUTLET INTO C.B. 193+00	192+86	IV												28				1							1						1	
	193+00	RECONST	2-2A/NO. 8 TOP			1																		2.5'±								
OUTLET INTO C.B. 203+00	202+86	IV												28				1													1	
	203+00	RECONST	2-2A/NO. 8 TOP			1																		2.5'±								
	209+00	III																1				4					1					
OUTLET INTO C.B. 215+50	215+37	II												21				1							1						1	
	215+50	RECONST	2-2A/NO. 8 TOP			1																		3.0'±								
	218+98															1																
STA. 259+77.84	235+50 - 259+77.84			2428																1												
BEGIN CITY-STATE-FEDERAL	259+77.84 ℄ - 278+16 ℄				1838															1												
OUTLET INTO C.B. 242+00	241+85	II												21				1		1					1						1	
	242+00	RECONST	2-2A/NO. 8 TOP			1																		3.0'±								
OUTLET INTO C.B. 247+50(SAG)	247+50	II	2-2A/NO. 8 TOP			1								18				1						4.2'±	1							
OUTLET INTO C.B. 250+00	250+16	II												21				1							1						1	
	250+00	RECONST	2-2A/NO. 8 TOP			1																		5.4'±								
	255+00	III																1				4					1					
OUTLET INTO C.B. 260+00	260+16	II													21				1							1						1
	260+00	RECONST	2-2A/NO. 8 TOP				1																	3.3'±								
BREAK IN GRADE	266+62.5																															
	273+00	III																	1				4					1				
OUTLET INTO C.B. 278+50	278+16	II													61		1									1						1
	278+50	RECONST	NO.8						1															5.0'±								
SUB-TOTAL STATE - FEDERAL				16647		14		2		1				450		3		27		8		19			19		4		1		20	
SUB-TOTAL CITY - STATE - FEDERAL					1838		1		1						82		1		2				4			2		1				2

L016338-A

QUANTITIES CARRIED TO SUB-SUMMARY SHEET 73.

605 SHALLOW UNDERDRAIN AS PER PLAN DRAINAGE QUANTITIES

NOTE: For details of Special Outlet II, III, and IV, see sheet 75.

★ NOTE: For Catch Basin Reconstructed to Grade As Per Plan, see sheet 75.

* NOTE: For details see Typical Outlet B Detail sheet 74

■ NOTE: For As Per Plan, see Catch Basin Reconstructed To Grade As Per Plan, Concrete Apron detail See Sheet 75.

CALC. BY	
DATE 11-8-23	
CHKD. BY	
DATE	

OHIO — FHWA REGION 5 — 80/123

LIC-37-15.61
LIC-16-14.26

RAMP STATIONING	SHALLOW UNDERDRAIN OUTLET STATION	TYPE	OUTLET INTO C.B.	605 SHALLOW UNDERDRAIN AS PER PLAN LIN. FT. S-F	C-S-F	★604 CATCH BASIN RECONSTRUCTED TO GRADE, AS PER PLAN EACH S-F	C-S-F	604 ■ NO. 8 CATCH BASIN AS PER PLAN EACH S-F	C-S-F	604 MEDIAN INLET EACH 2-6 S-F	2-8 S-F	603 6" CONDUIT, TYPE F, 707.17 NON-PERFORATED ASTM 3034 SDR 35 OR SS 931 LIN. FT. S-F	C-S-F	603 6" CONDUIT, TYPE B, 707.17 NON-PERFORATED ASTM 3034 SDR 35 OR SS 931 LIN. FT. S-F	C-S-F	STD. OUTLET FITTING EACH S-F	C-S-F	STD. TEE FITTING EACH S-F	C-S-F	STD. END CAP EACH S-F	C-S-F	603 6" CONDUIT, TYPE F, 707.15 LIN. FT. S-F	C-S-F	SPECIAL PRECAST REINFORCED CONCRETE OUTLET EACH S-F	C-S-F	BENDS AND BRANCHES 6"x4"-45°WYE S-F	C-S-F	6"x6" TEE S-F	C-S-F	6"x90° S-F	C-S-F	6"x60° S-F	C-S-F	EXISTING CATCH BASIN DEPTH
S.R. 16 – INTERCHANGE																																					
⊕ RAMP A LT TO RAMP A-B LT.																																					
75+14.94 RAMP A - 84+51.50 RAMP A=																																					
84+51.50 RAMP A-B - 90+70 RAMP A-B				1555																2																	
RAMP A	77+00	* B										15						1						1													
SAG RAMP A	78+75	* B										13						1						1													
RAMP A-B	84+00	* B										13						1						1													
RAMP A-B	89+00	II										6						1						1		1											
INLET ONLY RAMP A-B	85+00 ℄	REPLACE	2-6 MEDIAN OUTLET							⊕ 1																											
⊕ RAMP A(RT. SIDE)																																					
79+50 – 82+20				270																1																	
	79+50	* B										19				1								1								1					
INLET ONLY	82+50	REPLACE	2-8 MEDIAN OUTLET								⊕ 1																										
⊕ RAMP B																																					
78+41.17 LT – 83+69 LT				528																1																	
	82+50	III																1				4						1									
80+54 RT – 83+69 RT				324																																	
	82+50	* B										19						1						1													
⊕ RAMP A-B RT - RAMP B-B RT																																					
84+51.50 RAMP A-B - 87+86.5 RAMP A-B=																																					
87+86.51 RAMP B-B - 91+25 RAMP B-B				674																																	
RAMP A-B RT	85+50	* B										13						1						1													
⊕ RAMP C(LT. SIDE)																																					
78+45 – 85+93				748																1												1					
RAMP C	78+45	V												16		1																					
⊕ RAMP D(LT. SIDE)																				1																	
87+75 – 91+00				325												1																1					
	91+00	* B										15												1													
S.R. 37 – INTERCHANGE																																					
** RAMP E(RT. SIDE)																																					
108+50 – 110+70				220																1																	
	108+50	* B										13				1								1								1					
** RAMP F(RT. SIDE)																																					
111+37 – 116+89				552																1																	
OUTLET INTO C.B. 117+05 RT.	116+89	II										10				1																		1			
	117+05		NO. 8 RT.			1																														6.6'±	
** RAMP G(LT. SIDE)																																					
106+00 – 111+95				595																1												1					
	106+00	* B										24				1								1													
** RAMP H(LT. SIDE)																																					
112+69 – 121+85				916																1														1			
(OUTLET INTO C.B. 122+00 ℳ RT)	121+85	II										15				1										1											
GRANVILLE ROAD INTERCHANGE																																					
# LINE A																																					
270+50 RT. – 275+90 RT.					540																1																
(OUTLET INTO C.B. 275+90 RT)	275+90	II											12				1										1				1					
	275+90		NO. 8 36' RT.						1 #																											2.6'±	
CATCH BASIN ONLY LINE A	277+00	REPLACE	NO. 8 19' RT.						1 #																											4.6'±	
280+11 LT – 282+19 LT					208																1																
(OUTLET INTO C.B. 282+50 LT)	282+19 LT.	II											53				1										1							1		
	282+50 LT.	REPLACE	2-2A 52' LT.						1 #																											3.0'±	
# LINE B																																					
275+60 LT.-283+89.68 LT=																																					
10+00 LT – 12+73 LT					1102																1																
	281+00 LT.	* B											13						1						1												
	12+73 LT.	* B											13				1								1							1					
275+15 RT. – 281+00 RT.					585																1																
	281+00	* B											15				1								1							1					
SUB-TOTAL STATE-FEDERAL				6707		1				1	1	175		16		7		7		10		4		10		2		1		5		2				
SUB-TOTAL CITY-STATE-FEDERAL					2435				3				106				4		1		4				3		2				3		1			

⊕ NOTE: For further information see sheet 81.

** NOTE: For further information see sheet 89.

NOTE: For further information see sheet 89.

L01633E-B

QUANTITIES CARRIED TO SUB-SUMMARY SHEET 73

CALC. BY	
DATE	
CHKD. BY	
DATE	

OHIO

FHWA REGION 5

LIC-37-15.61
LIC-16-14.26

LEGEND

605 Shallow Underdrain, As per plan

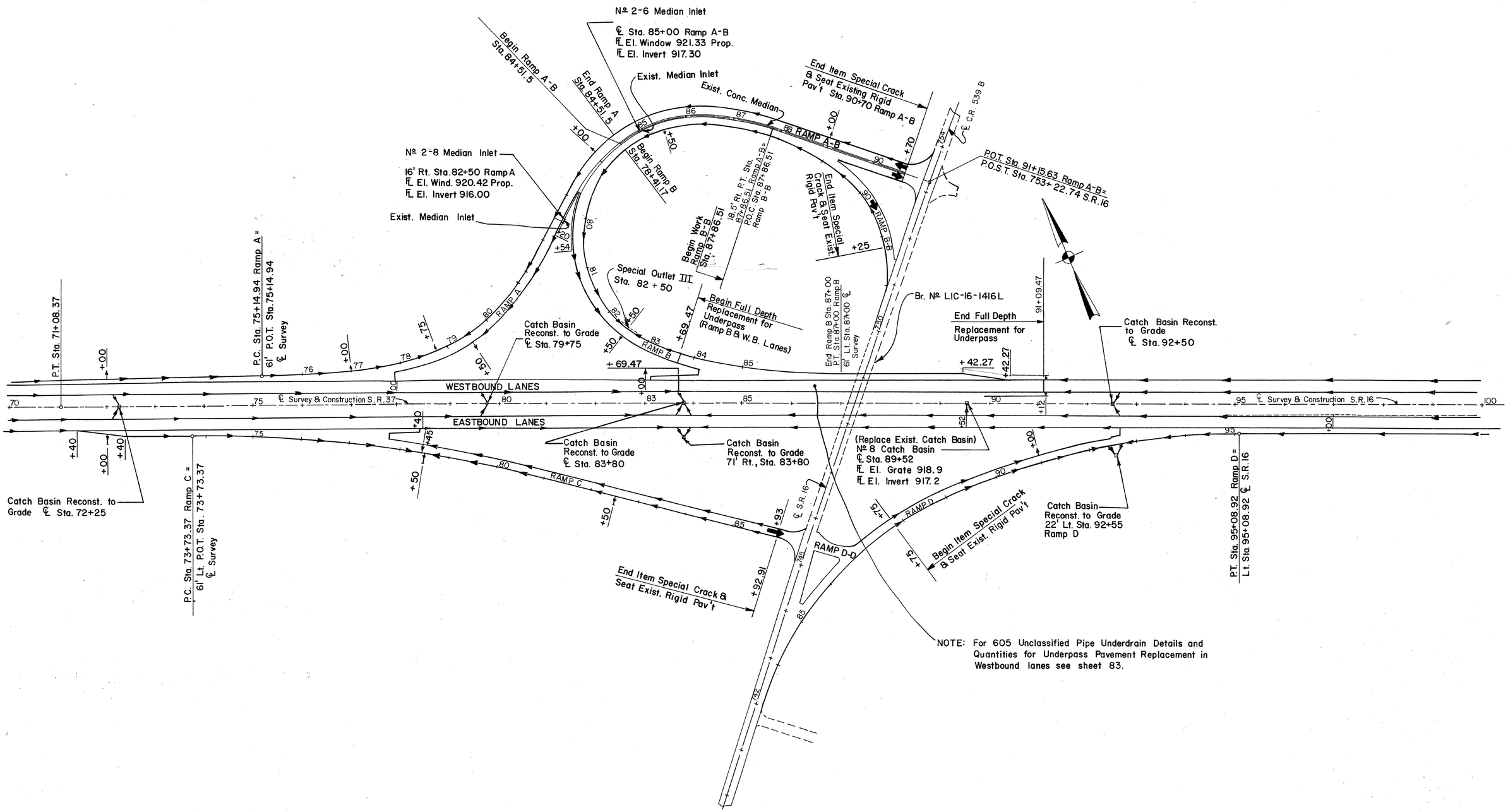

NOTE: For 605 Unclassified Pipe Underdrain Details and Quantities for Underpass Pavement Replacement in Westbound lanes see sheet 83.

INFORMATION ONLY

S.R. 16 INTERCHANGE

CALC. BY RGL DATE 1/28/89
CHKD. BY JWC DATE 1/25/89
OHIO
FHWA REGION 5
82/123

LIC-37-15.61
LIC-16-14.26

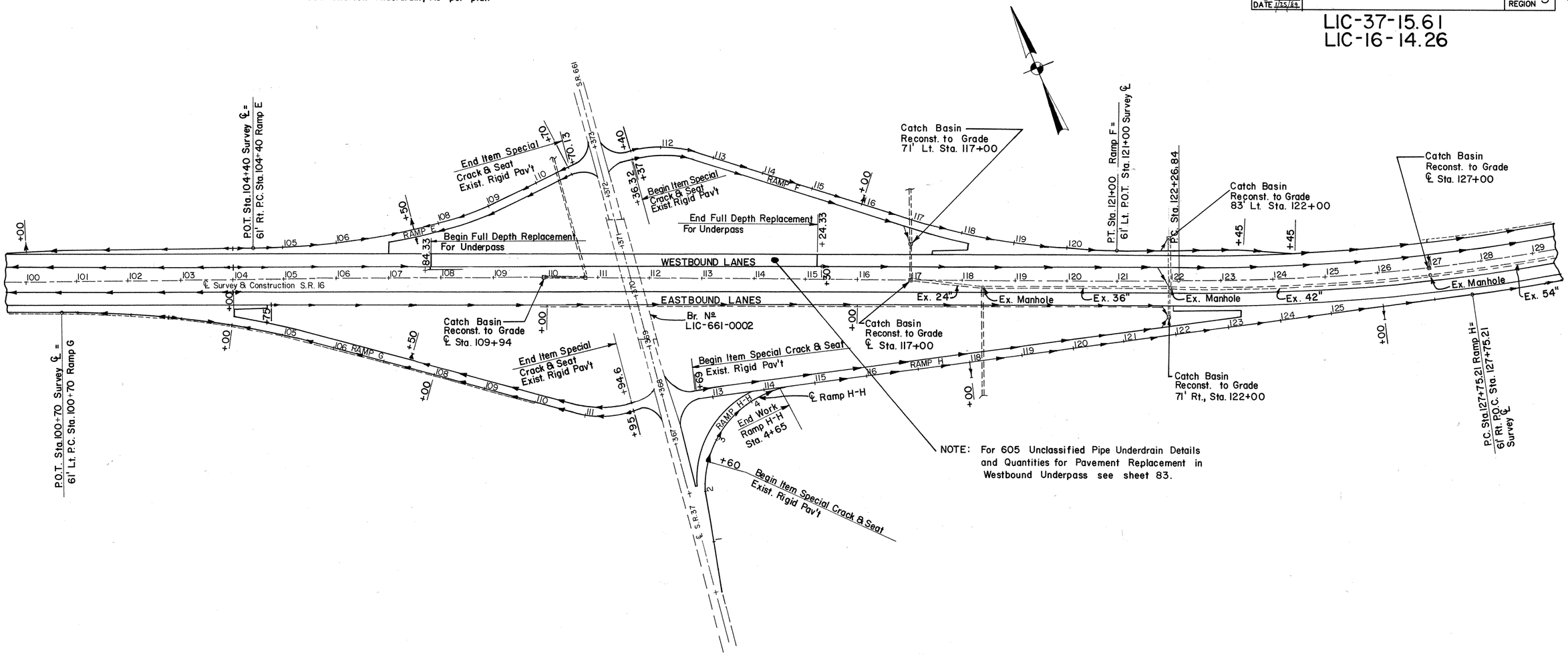

NOTE: For 605 Unclassified Pipe Underdrain Details and Quantities for Pavement Replacement in Westbound Underpass see sheet 83.

INFORMATION ONLY

S.R. 37 INTERCHANGE

CALC. BY	RGL
DATE	1/24/89
CHECK. BY	JWC
DATE	1/25/89

FHWA REGION	STATE	PROJECT	
5	OHIO		

LIC-37-15.61
LIC-16-14.26

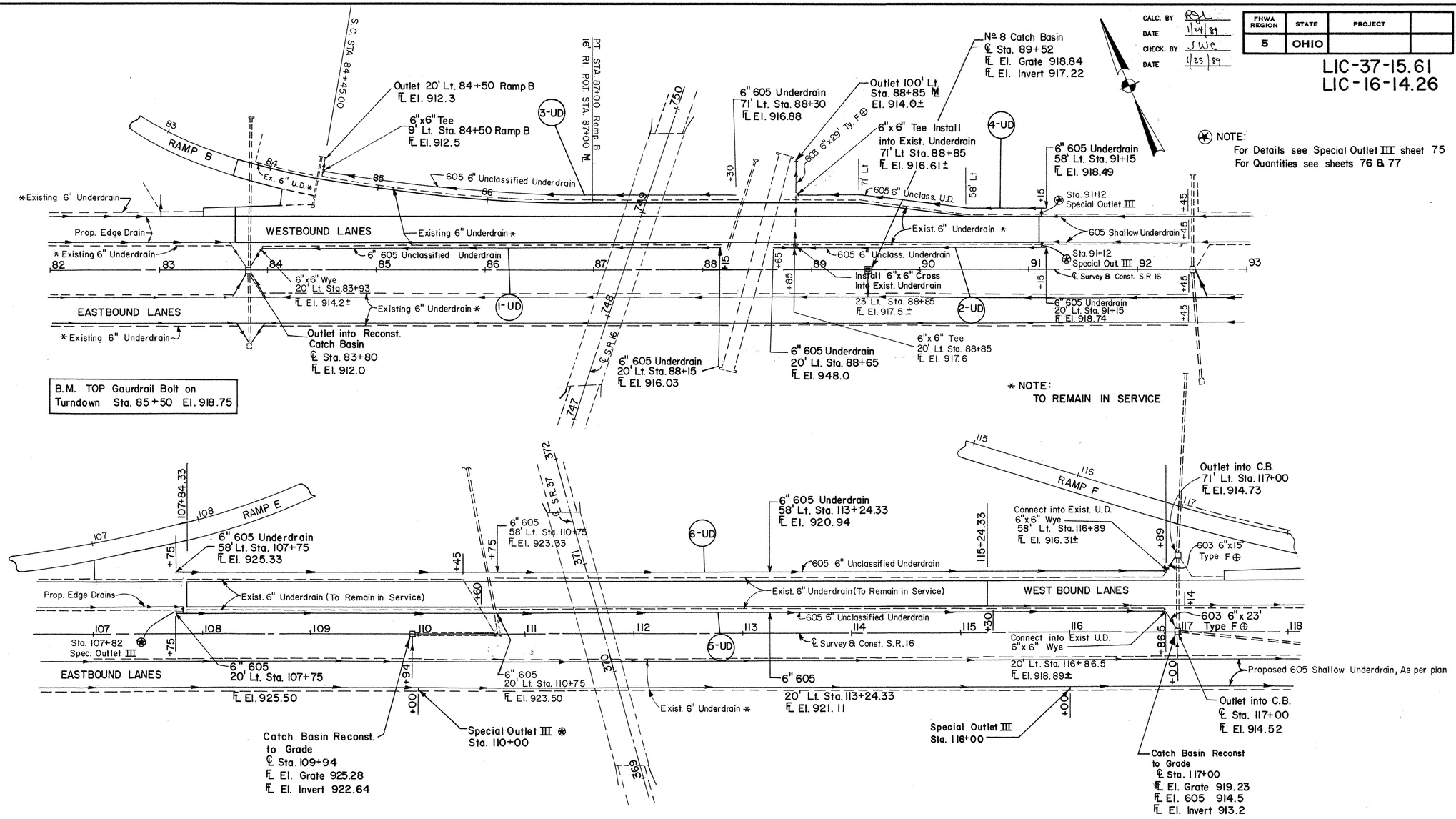

B.M. □ on N.E. Corner Catch Basin Sta. 109+95 El. 925.28

UNDERDRAINS

⊕ Non-perforated ASTM 3034 SDR 35 or SS 931 As per plan

** As Per Plan

MARK	STATION FROM	STATION TO	SIDE	605 ** 6" Unclass. Pipe Underdrain Lin. Ft.	603 Conduit Type F ⊕ Lin. Ft.				Special Precast Reinf. Conc. Outlet Each	Bends & Branches					
						6"					6"x6" Cross	6"x6" Wye	6"x6" Tee		
1-UD	83+80	88+15	MED. LT.	435		23						1			
2-UD	88+65	91+15	MED LT.	253							1		1		
3-UD	84+50 Ramp B	88+30 ℳ	Outside LT.	380		11			1				1		
4-UD	88+85	91+15	Outside LT.	230		29			1				1		
5-UD	107+75	117+00	MED. LT.	914		15						1			
6-UD	107+75	117+00	Outside LT.	912		23						1			
STATE - FEDERAL TOTAL				*3124		*101			*2		1	3	3		

* Quantities Carried to Sub-Summary sheet 73

UNDERPASS DRAINAGE DETAIL

CALC. BY	RDA
DATE	12-13-93
CHKD. BY	JWC
DATE	1/25/94

OHIO

FHWA REGION 5

84 / 123

LIC-37-15.61
LIC-16-14.26

QUANTITIES CARRIED * TO SHEET 73.

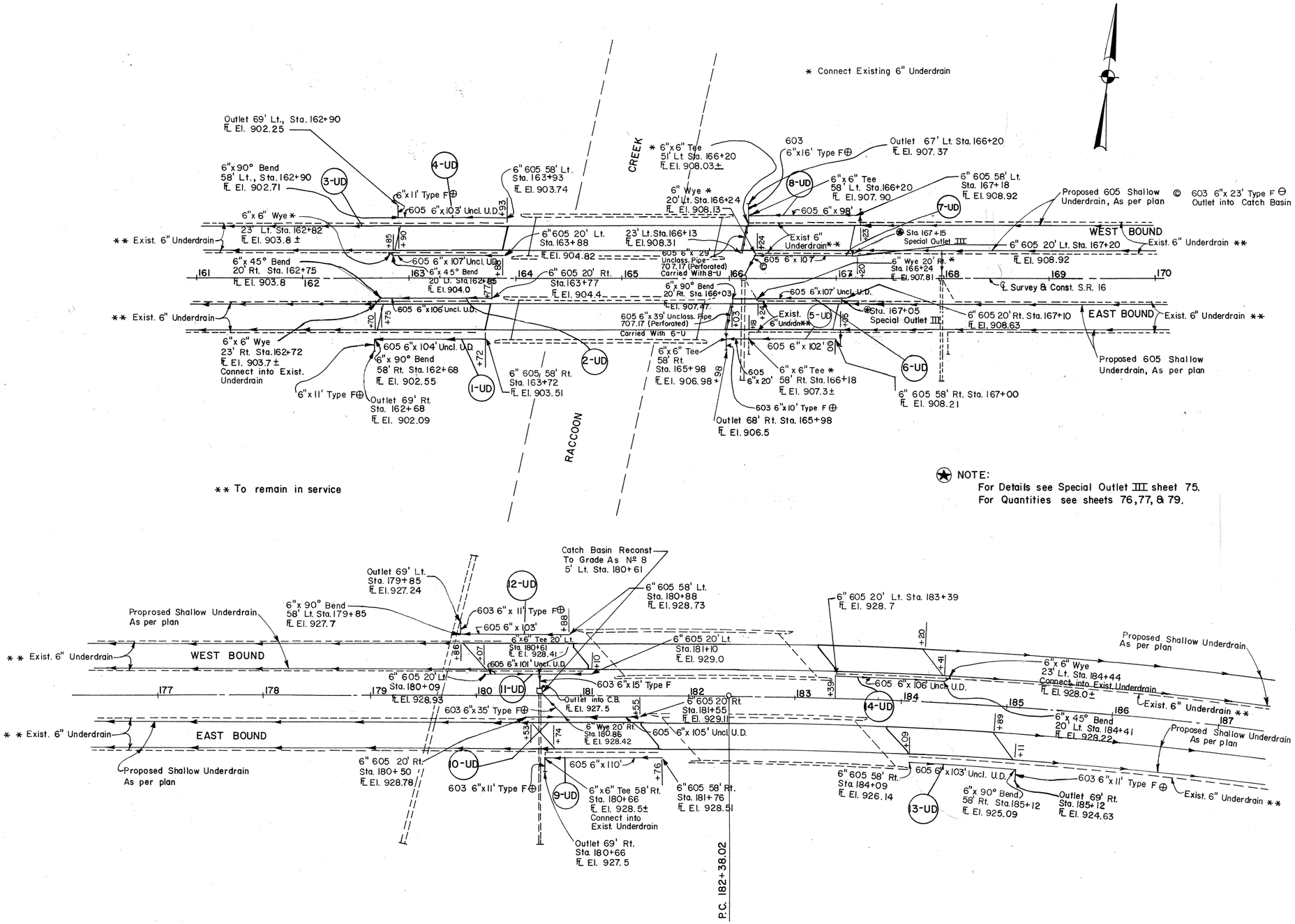

UNDERDRAINS

MARK	STATION FROM	STATION TO	SIDE	605 ⊕ 6" Unclass. Pipe Underdrains Lin. Ft.	603 Conduit Type F⊕ Lin. Ft. 6"	6" 605 ⊕ Unclass. Pipe Underdrains 707.17 Lin.Ft.	Bends & Branches 6"x45°	6"x90°	6"x6" Wye	6"x6" Tee
1-UD	162+68	163+72	RT. Outside	104	11		–		–	
2-UD	162+72	163+77	RT. Median	106			–			
3-UD	162+82	163+88	LT. Median	107			–		–	
4-UD	162+90	163+93	LT. Outside	103	11			–		2
5-UD	165+98	167+00	RT. Outside	102	10					
6-UD	165+98	167+10	RT. Median	107		39		–	–	
7-UD	166+13	167+20	LT. Median	107	23				–	–
8-UD	166+13	167+18	LT. Outside	98	16					
9-UD	180+66	181+76	RT. Outside	110	11	29			–	–
10-UD	180+29	181+55	RT. Median	105	35					
11-UD	180+09	181+10	LT. Median	101	15					–
12-UD	179+85	180+88	LT. Outside	103	11			–		
13-UD	184+09	185+12	RT. Outside	103	11					
14-UD	183+39	184+44	RT. Median	106						
TOTAL STATE - FEDERAL				*1462	*154	*68	2	4	5	5

⊕ 707.17 Non-Perforated ASTM 3034 SDR 35 or SS 931 ⊕ As Per Plan

OVERPASS DRAINAGE DETAIL

LIC-37-15.61
LIC-16-14.26

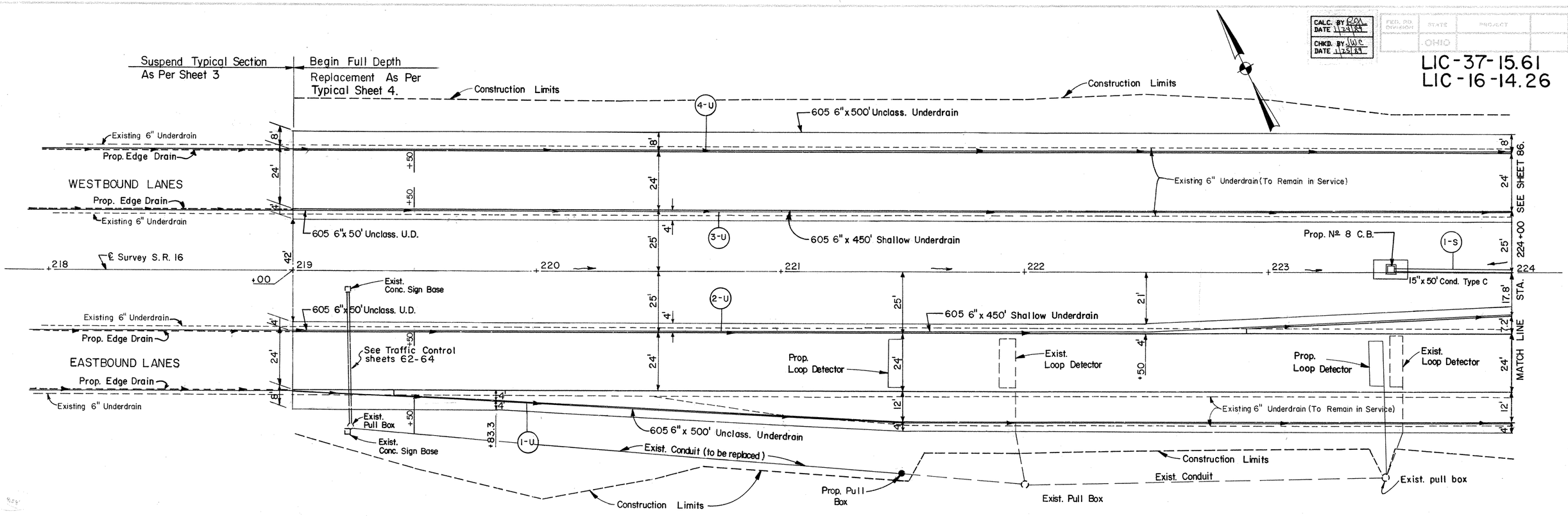

UNDERDRAINS

** As Per Plan

MARK	STATION FROM	STATION TO	SIDE	605 ** 6" Shallow Underdrains Lin. Ft.	604 ** Nº 8 Catch Basin Each	603 15" Conduit Type C Lin. Ft.	Bends & Branches Each 6" x 6" Tee	605 ** 6" Unclass. Pipe Underdrn Lin. Ft.
1-U	219+00	224+00	Rt.				1	500
2-U	219+00	224+00	Rt.	450			1	50
3-U	219+00	224+00	Lt	450			1	50
4-U	219+00	224+00	Lt				1	500
1-S	223+50	224+00	℄		1	50		
State & Federal		Total		* 900	* 1	* 50	4	* 1100

* QUANTITIES CARRIED TO SUB-SUMMARY SHEET 73

UNDERDRAIN DETAIL 218+00 – 224+00

CALC. BY DSL DATE 1/24/89
CHKD. BY JWC DATE 1/25/89

FED. RD. DIVISION | STATE OHIO | PROJECT

LIC-37-15.61
LIC-16-14.26

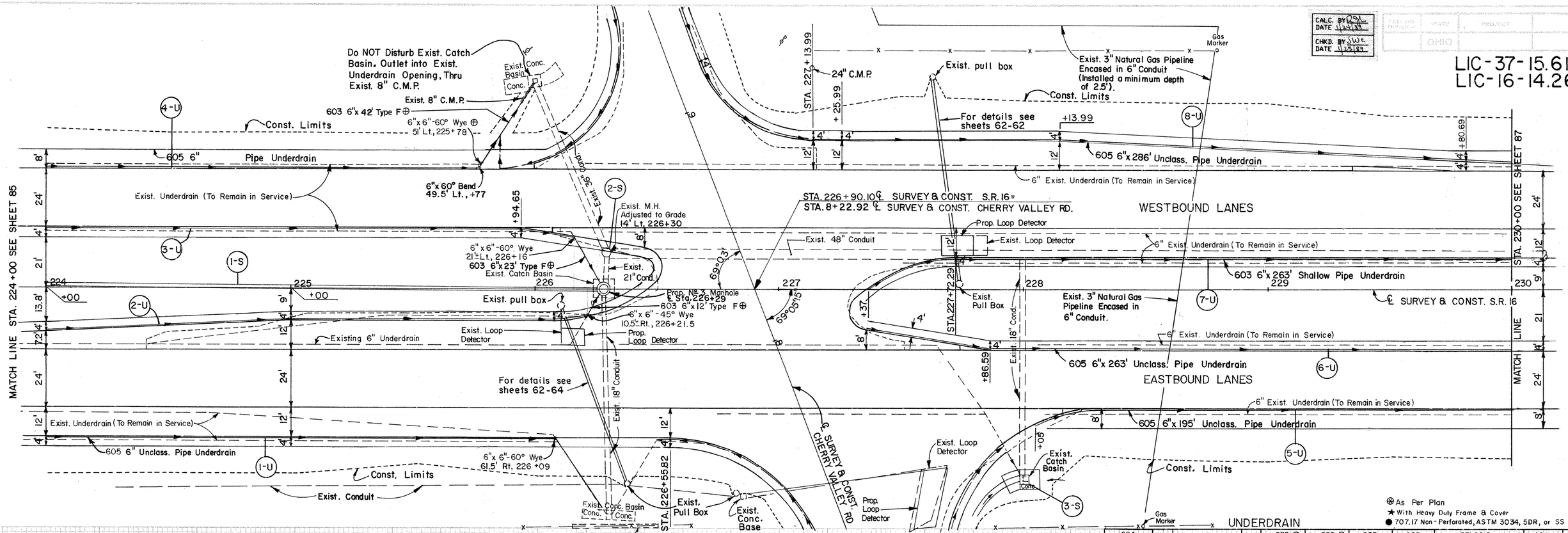

B.M. ☐ S.W. Corner Concrete Headwall
23' Rt., Sta. 10+02 Cherry Valley Rd. El. 889.76

UNDERDRAIN

604 CATCH BASIN RECONST. TO GRADE EACH	MARK	STATION FROM	STATION TO	SIDE	605 ⊗ 6" SHALLOW UNDERDRAIN LIN. FT.	605 ⊗ 6" UNCLASS. PIPE UNDERDRAIN LIN. FT	603 6" CONDUIT TYPE F ● LIN. FT.	603 15" CONDUIT TYPE C LIN. FT	BENDS & BRANCHES EACH 6"x6"-60° Wye	BENDS & BRANCHES EACH 6"x60° Bend	604 No. 3 MANHOLE ★ EACH	604 MH. ADJUST. TO GRADE ★ EACH
	1-U	224+00	226+29	RT.		209			1			
	2-U	224+00	226+30	RT.	200	22	12		1			
	3-U	224+00	226+30	LT.	221		23		1			
	4-U	224+00	226+00	LT.		177	42		1	1		
	5-U	228+05	230+00	RT.		195						
	6-U	227+37	230+00	RT.		263						
	7-U	227+37	230+00	LT.	263							
	8-U	227+13.99	230+00	LT.		286						
	1-S	224+00	226+29	℄				229			1	
	2-S	226+30		LT.								1
1	3-S	228+00		RT.								
1	TOTALS State & Federal				* 684	* 1152	* 77	* 229	4	1	* 1	* 1

⊗ As Per Plan
★ With Heavy Duty Frame & Cover
● 707.17 Non-Perforated, ASTM 3034, 5DR, or SS 931

⊕ NOTE:
Connect into existing Underdrain.

* QUANTITIES CARRIED TO SUB-SUMMARY SHEET 73.

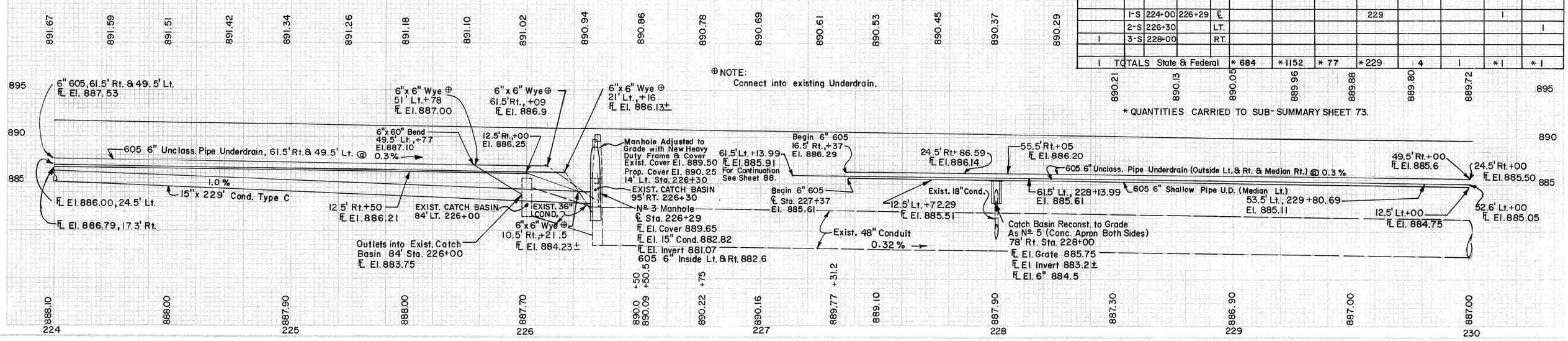

UNDERDRAIN DETAIL 224+00 - 230+00

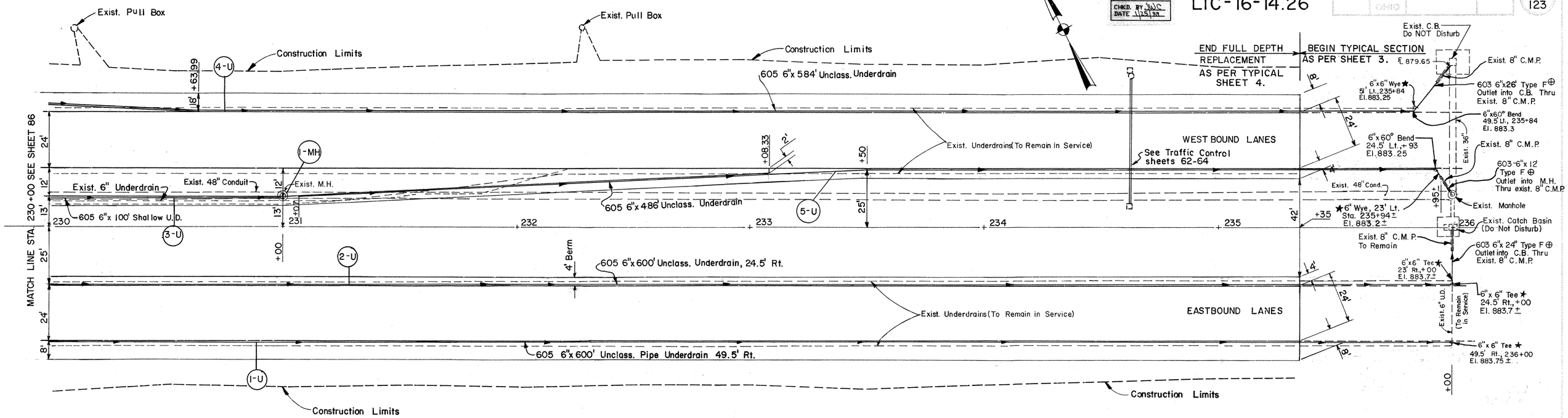

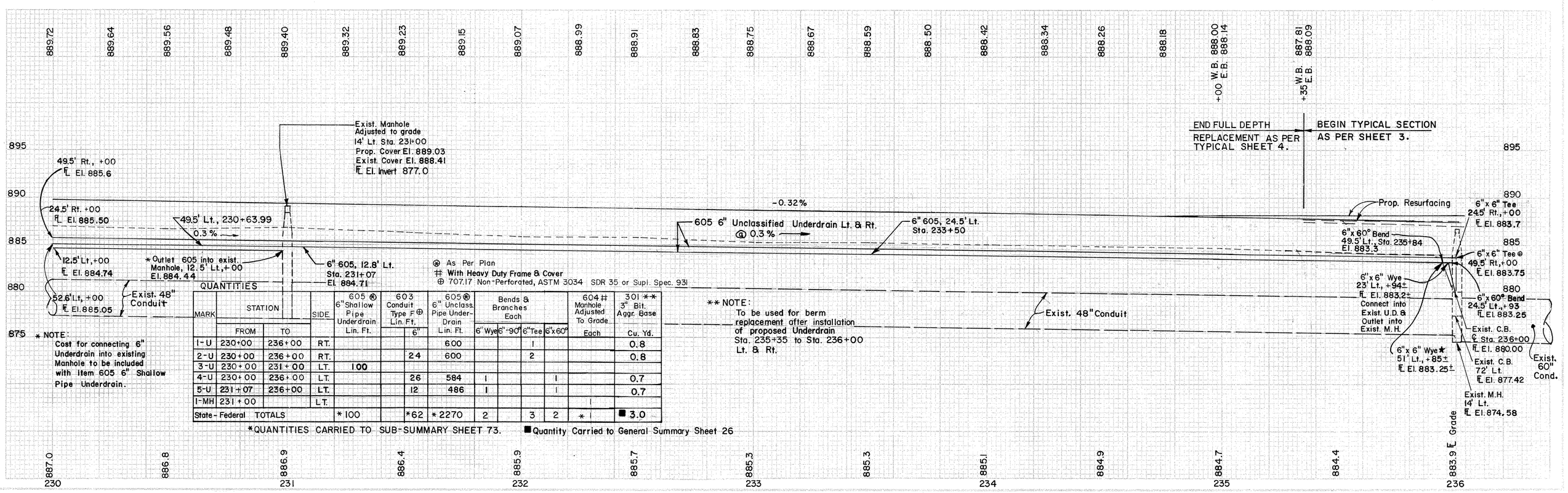

QUANTITIES

MARK	STATION FROM	STATION TO	SIDE	605⊛ 6" Shallow Pipe Underdrain Lin. Ft.	603 Conduit Type F⊕ Lin. Ft. 6"	605⊛ 6" Unclass. Pipe Under-Drain Lin. Ft.	Bends & Branches Each 6" Wye	6"-90°	6" Tee	6"x60°	604# Manhole Adjusted To Grade Each	301** 3" Bit. Aggr. Base Cu. Yd.
1-U	230+00	236+00	RT.			600			1			0.8
2-U	230+00	236+00	RT.		24	600			2			0.8
3-U	230+00	231+00	LT.	100								
4-U	230+00	236+00	LT.		26	584	1			1		0.7
5-U	231+07	236+00	LT.		12	486	1			1		0.7
1-MH	231+00		LT.								1	
State-Federal TOTALS				*100	*62	*2270	2		3	2	*1	■3.0

*QUANTITIES CARRIED TO SUB-SUMMARY SHEET 73. ■Quantity Carried to General Summary Sheet 26

UNDERDRAIN DETAIL 230+00 – 236+00

LIC-37-15.61
LIC-16-14.26

CALC. BY RDK DATE 1/24/89
CHKD. BY JWC DATE 1/25/89

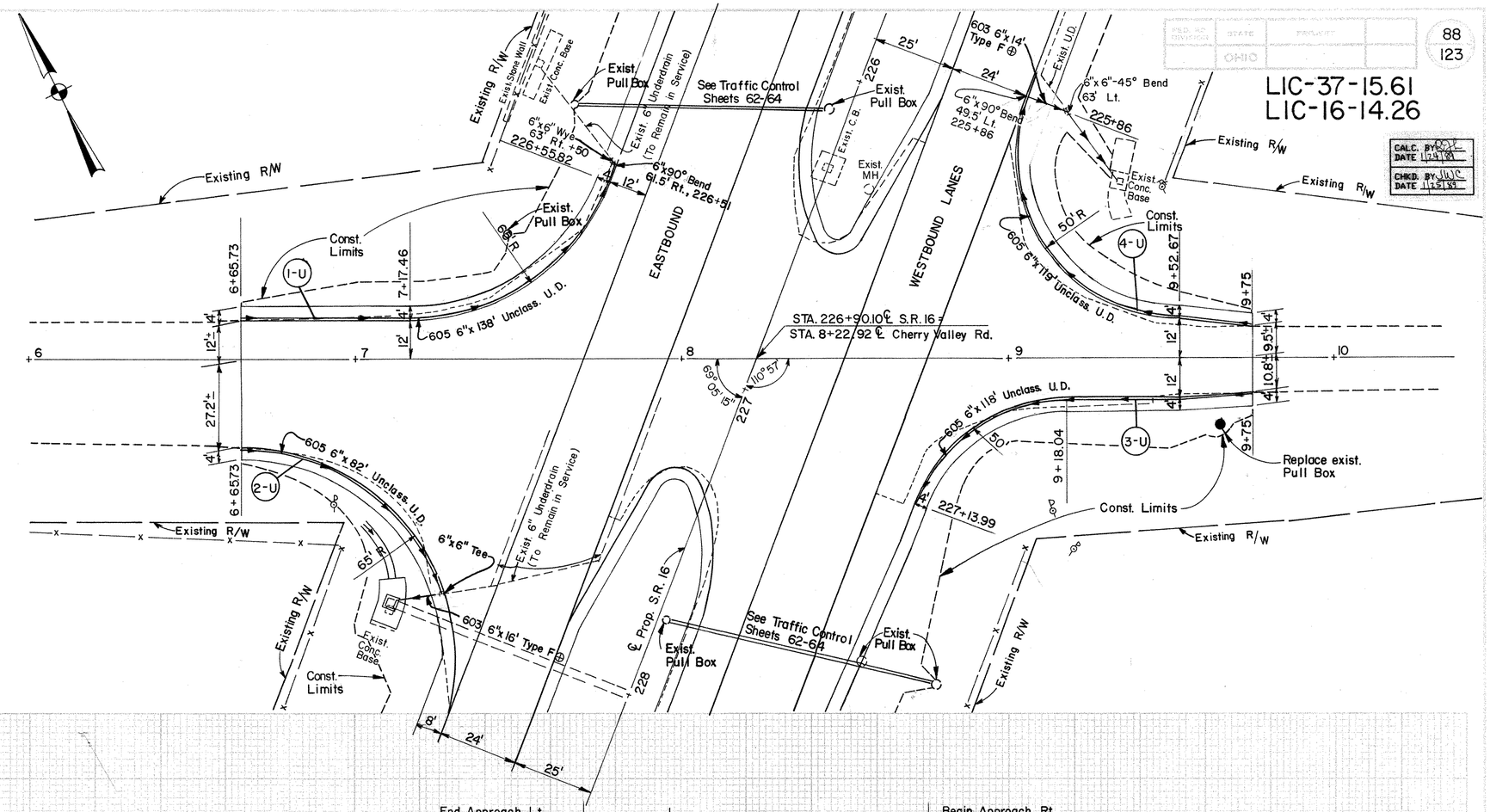

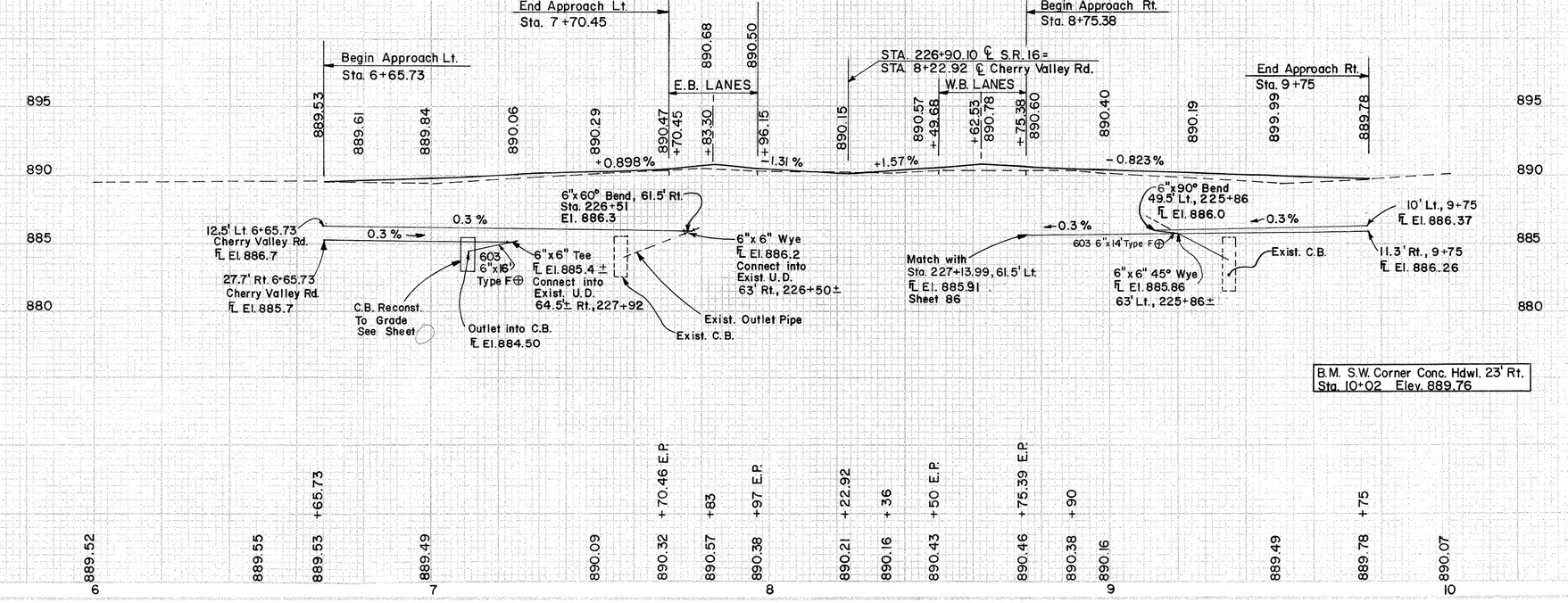

UNDERDRAINS

** As Per Plan
⊕ 707.17 Non-perforated ASTM 3034 SDR or SS 931

MARK	STATION FROM	STATION TO	SIDE	605** 6" Unclass. Pipe Under Drain Lin.Ft.	603 6" Conduit Type F ⊕ Lin. Ft.	Bends & Branches 6"x60°	6"x6" Wye	6"x6" Tee	6"x6"-45° Wye	6"x90°
1-U	6+65.73	226+51 ℄	Lt.	138	2	1	1			
2-U	6+65.73	227+93 ℄	Rt.	82	16			1		
3-U	227+13.99 ℄	9+75 Cherry Valley	Rt.	118						
4-U	225+85.8 ℄	9+75 Cherry Valley	Lt.	119	14				1	1
TOTAL				* 457	* 32	1	1	1	1	1

* QUANTITIES CARRIED TO SUB-SUMMARY SHEET 73.

UNDERDRAIN DETAIL CHERRY VALLEY ROAD

LIC-37-15.61
LIC-16-14.26

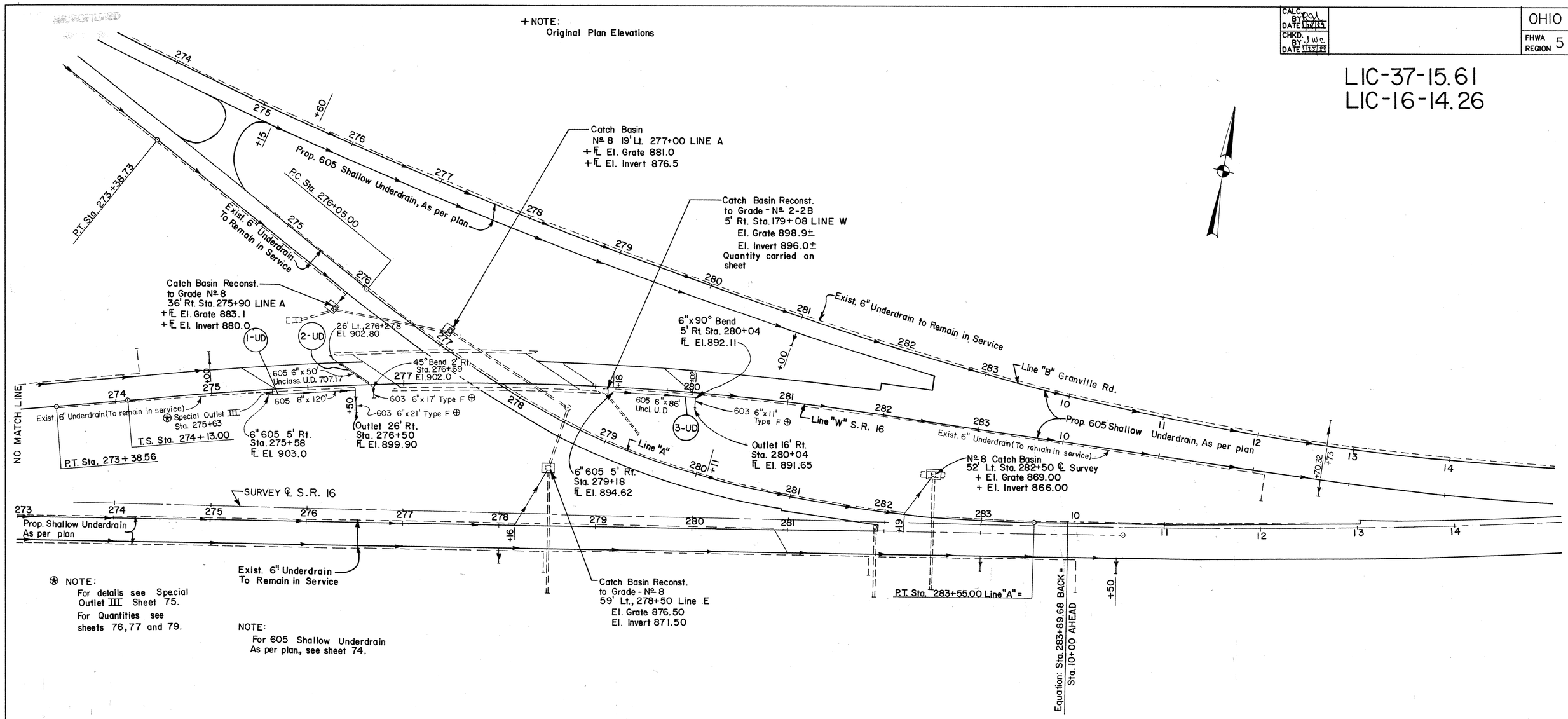

⊛ NOTE:
For details see Special Outlet III Sheet 75.
For Quantities see sheets 76, 77 and 79.

NOTE:
For 605 Shallow Underdrain As per plan, see sheet 74.

UNDERDRAINS

⊕ 707.17 Non-perforated ASTM 3034 SDR 35 or SS 931

** As Per Plan

MARK	STATION FROM	STATION TO	SIDE	605 ** 6" Unclass. Pipe Under-Drains Lin. Ft.	603 Conduit Type F ⊕ Lin. Ft.	603 Conduit Type F ⊕ Lin. Ft. 6"		605 ** 6" Unclass. Pipe Under-Drains 707.17 Lin. Ft.	Special Precast Reinforced Concrete Outlet Each		Bends & Branches 6"x90°	Bends & Branches 6"x6" Tee	Bends & Branches 6"x45°
1-UD	275+30	276+50	Line W Rt	120		21			1			1	
2-UD	276+27.8	276+69	Lt & Rt			17		50	1				1
3-UD	279+18	280+26	Line W Rt	108		11			1		1		
CITY-STATE-FEDERAL TOTAL				*228		*49		*50	*3		1	1	1

*QUANTITIES CARRIED TO SHEET 73

GRANVILLE ROAD INTERCHANGE

MICROFILMED
NOV 5 1992

BRIDGE NOTES

REFERENCE

DETAILED DRAWINGS OF THE EXISTING STRUCTURE MAY BE INSPECTED IN THE DISTRICT 5 OFFICE OF THE OHIO DEPARTMENT OF TRANSPORTATION, JACKSONTOWN, OHIO.

REMOVED MATERIALS

ALL REMOVED MATERIALS EXCEPT AS NOTED ELSEWHERE IN THE PLANS SHALL BECOME THE PROPERTY OF THE CONTRACTOR AND SHALL BE REMOVED BY HIM FROM THE JOB SITE.

EXISTING STRUCTURE VERIFICATION

DETAILS AND DIMENSIONS SHOWN ON THESE PLANS PERTAINING TO THE EXISTING STRUCTURE HAVE BEEN OBTAINED FROM PLANS OF THE EXISTING STRUCTURE AND/ OR FROM FIELD OBSERVATIONS AND MEASUREMENTS. CONSEQUENTLY, THEY ARE INDICATIVE OF THE EXISTING STRUCTURE AND THE PROPOSED WORK, BUT THEY SHALL BE CONSIDERED TENTATIVE AND APPROXIMATE. THE CONTRACTOR IS REFERRED TO CMS SECTIONS 102.05 AND 105.02.

CONTRACT BID PRICES SHALL BE BASED UPON A RECOGNITION OF THE UNCERTAINTIES DESCRIBED ABOVE AND UPON A PREBID EXAMINATION OF THE EXISTING STRUCTURE BY THE CONTRACTOR. HOWEVER, ALL PROJECT WORK SHALL BE BASED UPON ACTUAL DETAILS AND DIMENSIONS WHICH HAVE BEEN VERIFIED BY THE CONTRACTOR IN THE FIELD.

AREAS OF WORK

THE GENERAL AREAS OF WORK AS INDICATED ON THE PLAN AND PROFILE AND DETAIL SHEETS ARE:

REMOVALS:

1. REMOVE ASPHALT WEARING COURSE, BRIDGE RAILS, PARAPETS AND PORTIONS OF EXISTING DECK
2. ~~REMOVE ENDS OF BEAMS AS SHOWN~~

CONSTRUCTION:

1. INSTALL EXPANSION JOINTS AND SAFETY SHAPE PARAPETS
2. PATCH CONCRETE DECKS
3. OVERLAY BRIDGE DECKS

REPLACEMENT OF EXISTING REINFORCING STEEL

ANY EXISTING REINFORCING BARS WHICH ARE TO BE INCORPORATED INTO THE NEW WORK AND WHICH ARE MADE UNUSABLE BY THE CONTRACTOR'S CONCRETE REMOVAL OPERATIONS SHALL BE REPLACED WITH NEW STEEL AT HIS COST. ANY EXISTING REINFORCING BARS DEEMED BY THE ENGINEER TO BE UNUSABLE BECAUSE OF CORROSION SHALL BE REPLACED WITH NEW STEEL. AN ADDITIONAL 100 LBS. (CITY/STATE/FED.) AND 500 LBS. (STATE/FED.) IS INCLUDED IN ITEM 509 FOR THIS PURPOSE.

REINFORCING STEEL SAMPLES

REFER TO CMS SECTIONS 106.03, 700, 709.01 THROUGH 709.05 AND 709.08. SUFFICIENT ADDITIONAL REINFORCING STEEL SHALL BE PROVIDED FOR SAMPLING. RANDOM SAMPLES SHALL BE REPLACED IN THE STRUCTURES BY THE ADDITIONAL STEEL, SPLICED IN ACCORDANCE WITH 509.08.

ESTIMATED QUANTITIES

AN ESTIMATED AMOUNT OF THE FOLLOWING QUANTITIES HAS BEEN INCLUDED IN THE GENERAL SUMMARY WITH AN ADDITIONAL 20% FOR BIDDING PURPOSES, BUT THE FINAL QUANTITIES SHALL BE DETERMINED BY ACTUAL FIELD MEASUREMENTS AT THE COMPLETION OF THE WORK.

BRIDGE NUMBERS

	LIC-16 1416L	LIC-16 1560L	LIC-16 1560R	LIC-16 1594L	LIC-16 1594R	LIC-16 1773L		TOTAL	UNIT
ITEM 850 SUPERPLASTICIZED DENSE CONCRETE OVERLAY (VARIABLE THICKNESS)	15	12	12	13	13	13		78	CU. YD.

REMOVAL OF CONCRETE PARAPETS AND EDGES

CONCRETE REMOVALS ON PARAPETS & EDGES SHALL BE DONE BY THE USE OF 40 – 65 LB. CLASS JACK HAMMERS ONLY. NO OTHER METHOD SHALL BE USED UNLESS APPROVED BY THE DISTRICT 5 CONSTRUCTION ENGINEER.

STANDARD DRAWINGS & SUPPLEMENTAL SPECIFICATIONS

REFERENCE SHALL BE MADE TO STANDARD DRAWINGS:

EXJ-4-87	DATED	1-5-89
BR-1	DATED	5-29-79
GR-1	DATED	1-11-85
GR-3	DATED	1-21-85
GR-2B	DATED	2-5-82
SD-1-69, (SHTS. 1-3)	DATED	6-12-69

AND TO SUPPLEMENTAL SPECIFICATIONS:

850	DATED	5-31-88
836	DATED	11-12-85

BRIDGE DECK CONDITION SURVEY

BRIDGE NO.	DECK AREA SQ.YD.	SOUNDED	
		METHOD	DATE
LIC-16-1416L	824	CORED	6-13-88
LIC-16-1560L	735	CORED	6-13-88
LIC-16-1560R	735	CORED	6-14-88
LIC-16-1594L	753	CORED	6-13-88
LIC-16-1594R	753	CORED	6-14-88
LIC-16-1773L	774	CORED	6-13-88

Rev. 9-25-89

L016104D (c) 9/14/88

MICROFILMED
NOV 5 1992

BRIDGE SUB-SUMMARY

CALC. BY	DATE	CHKD. BY	DATE			
RSD	12-12-88	JWB	12-19-88	LIC-37-15.61 LIC-16-14.26	OHIO FHWA REGION 5	91/123

ALL QUANTITIES CARRIED TO BRIDGE GENERAL SUMMARY SHEET 92 , EXCEPT AS NOTED
* QUANTITIES CARRIED TO THE ROADWAY QUANTITIES ON SHEET 25 .

ITEM	SHEET NUMBER 90	97	98	99	101	102	103	104	105	106	107	108	109	110	111	112	113	114	BRIDGE NUMBERS LIC-16 1416L	LIC-16 1560L	LIC-16 1560R	LIC-16 1594L	LIC-16 1594R	LIC-16 1773L	ITEM	SUB-TOTAL	UNIT	DESCRIPTION
																												STATE AND FEDERAL
202		40																		14	14	7	5		202	40	EACH	VERTICAL EXTENSION OF SCUPPERS REMOVED, AS PER PLAN
202			276														27		85	52	52	57	57		202	303	CU.YD.	PORTIONS OF STRUCTURES REMOVED, SUPERSTRUCTURE
202						20		42		48									20	21	21	24	24		202	110	CU.YD.	PORTIONS OF STRUCTURES REMOVED, SUBSTRUCTURE
202						34		66		84									34	33	33	42	42		202	184	SQ.YD.	PORTIONS OF APPROACH SLAB REMOVED *
202			3800																824	735	735	753	753		202	3800	SQ.YD.	WEARING COURSE REMOVED
202																		453	73	82	82	108	108		202	453	LIN.FT.	EXPANSION JOINTS REMOVED
510				3420															844	632	632	654	658		510	3420	EACH	DOWEL HOLES 6"
510							200		428		280	280							200	214	214	280	280		510	1188	EACH	DOWEL HOLES 12"
511				243													27		65	49	50	53	53		511	270	CU.YD.	CLASS S CONCRETE, SUPERSTRUCTURE
511							20		40		24	24							20	20	20	24	24		511	108	CU.YD.	CLASS C CONCRETE, ABUTMENTS
513																	7376		1140	1426	1426	1692	1692		513	7376	POUND	STRUCTURAL STEEL REMOVED FOR RE-USE
513																	3022		380	475	475	846	846		513	3022	POUND	STRUCTURAL STEEL (AISC CATEGORY I)
516																		475	77	86	86	113	113		516	475	LIN.FT.	STRUCTURAL EXPANSION JOINTS, INCLUDING ELASTOMERIC 4" STRIP SEALS
518							22		40		27	23							22	20	20	27	23		518	112	CU.YD.	POROUS BACKFILL
518		40																		14	14	7	5		518	40	EACH	SCUPPER REHABILITATION, AS PER PLAN
611							34		64		42	42							34	32	32	42	42		611	182	SQ.YD.	REINFORCED CONCRETE APPROACH SLAB (T=15"), AS PER PLAN
622		1440																		360	360	360	360		622	1440	LIN.FT.	TEMPORARY CONCRETE BARRIER, BRIDGE MOUNTED *
509	500				35545											15488	6931		12909	10578	10595	12175	12207		509	58464	POUND	EPOXY COATED REINFORCING STEEL, GRADE 60
850			3939																927	746	746	760	760		850	3939	SQ.YD.	SUPERPLASTICIZED DENSE CONCRETE OVERLAY (1 3/4" THICK)
850	15																		15						850	15	CU.YD.	SUPERPLASTICIZED DENSE CONCRETE OVERLAY (VAR. THICKNESS) (BR. NO. LIC-16-1416 L)
850	12																			12					850	12	CU.YD.	SUPERPLASTICIZED DENSE CONCRETE OVERLAY (VAR. THICKNESS) (BR. NO. LIC-16-1560 L)
850	12																				12				850	12	CU.YD.	SUPERPLASTICIZED DENSE CONCRETE OVERLAY (VAR. THICKNESS) (BR. NO. LIC-16-1560 R)
850	13																					13			850	13	CU.YD.	SUPERPLASTICIZED DENSE CONCRETE OVERLAY (VAR. THICKNESS) (BR. NO. LIC-16-1594 L)
850	13																						13		850	13	CU.YD.	SUPERPLASTICIZED DENSE CONCRETE OVERLAY (VAR. THICKNESS) (BR. NO. LIC-16-1594 R)
850			LUMP																LUMP						850	LUMP		TEST SLAB
SPEC.				1894															483	346	337	363	365		SPEC.	1894	SQ.YD.	SEALING OF CONCRETE SURFACES (EPOXY) (SEE PROPOSAL NOTE)
																												CITY, STATE AND FEDERAL
202		6																						6	202	6	EACH	VERTICAL EXTENSION OF SCUPPERS REMOVED, AS PER PLAN
202			53														8							61	202	61	CU.YD.	PORTIONS OF STRUCTURES REMOVED, SUPERSTRUCTURE
202													36											36	202	36	CU.YD.	PORTIONS OF STRUCTURES REMOVED, SUBSTRUCTURE
202													54											54	202	54	SQ.YD.	PORTIONS OF APPROACH SLAB REMOVED *
202			774																					774	202	774	SQ.YD.	WEARING COURSE REMOVED
202																		141						141	202	141	LIN.FT.	EXPANSION JOINTS REMOVED
510				686																				686	510	686	EACH	DOWEL HOLES 6"
510														183	195									378	510	378	EACH	DOWEL HOLES 12"
511				49													8							57	511	57	CU.YD.	CLASS S CONCRETE, SUPERSTRUCTURE
511														18	20									38	511	38	CU.YD.	CLASS C CONCRETE, ABUTMENT
513																	2168							2168	513	2168	POUND	STRUCTURAL STEEL REMOVED FOR RE-USE
513																	1084							1084	513	1084	POUND	STRUCTURAL STEEL
516																		148						148	516	148	LIN.FT.	STRUCTURAL EXPANSION JOINTS, INCLUDING ELASTOMERIC 4" STRIP SEALS
518														23	26									49	518	49	CU.YD.	POROUS BACKFILL
518		6																						6	518	6	EACH	SCUPPER REHABILITATION, AS PER PLAN
611														26	28									54	611	54	SQ.YD.	REINFORCED CONCRETE APPROACH SLAB (T=15"), AS PER PLAN
622		380																						380	622	380	LIN.FT.	TEMPORARY CONCRETE BARRIER, BRIDGE MOUNTED *
509	100				7133											4719	2175							14127	509	14127	POUND	EPOXY COATED REINFORCING STEEL, GRADE 60
850			776																					776	850	776	SQ.YD.	SUPERPLASTICIZED DENSE CONCRETE OVERLAY (1 3/4" THICK)
850	13																							13	850	13	CU.YD.	SUPERPLASTICIZED DENSE CONCRETE OVERLAY (VAR. THICKNESS) (BR. NO. LIC-16-1773L
SPEC.				378																				378	SPEC.	378	SQ.YD.	SEALING OF CONCRETE SURFACES (EPOXY) (SEE PROPOSAL NOTE)

L03715A7 (C) 9/19/88 REV. 10/8/88

MICROFILMED
NOV 5 1992

BRIDGE SUMMARY

CALC. BY: DATE 12-17-86
CHKD. BY: DATE 12-19-89

LIC-37-15.61
LIC-16-14.26

OHIO
FHWA REGION 5

ITEM	STATE AND FEDERAL SHEET NUMBER	CITY, STATE AND FEDERAL SHEET NUMBER	PARTICIPATION STATE & FEDERAL SUB-TOTAL	PARTICIPATION CITY, STATE & FEDERAL SUB-TOTAL	ITEM	ITEM EXT.	GRAND TOTAL	UNIT	DESCRIPTION
	91	91							
202	40	6	40	6	202		46	EACH	VERTICAL EXTENSION OF SCUPPERS REMOVED, AS PER PLAN
202	303	61	303	61	202		364	CU.YD.	PORTIONS OF STRUCTURES REMOVED, SUPERSTRUCTURE
202	110	36	110	36	202		146	CU.YD.	PORTIONS OF STRUCTURES REMOVED, ABUTMENTS
202	3800	774	3800	774	202		4574	SQ.YD.	WEARING COURSE REMOVED
202	453	141	453	141	202		594	LIN.FT.	EXPANSION JOINTS REMOVED
510	3420	686	3420	686	510		4106	EACH	DOWEL HOLES 6"
510	1188	378	1188	378	510		1566	EACH	DOWEL HOLES 12"
511	270	57	270	57	511		327	CU.YD.	CLASS S CONCRETE, SUPERSTRUCTURE
511	108	38	108	38	511		146	CU.YD.	CLASS C CONCRETE, ABUTMENT
513	7376	2168	7376	2168	513		9544	POUND	STRUCTURAL STEEL REMOVED FOR RE-USE
513	3022	1084	3022	1084	513		4106	POUND	STRUCTURAL STEEL (AISC CATEGORY I)
516	475	148	475	148	516		623	LIN.FT.	STRUCTURAL EXPANSION JOINTS, INCLUDING ELASTOMERIC 4" STRIP SEALS
518	112	49	112	49	518		161	CU.YD.	POROUS BACKFILL
518	40	6	40	6	518		46	EACH	SCUPPER REHABILITATION, AS PER PLAN
509	58464	14127	58464	14127	509		72591	POUND	EPOXY COATED REINFORCING STEEL, GRADE 60
850	3939	776	3939	776	850		4715	SQ.YD.	SUPERPLASTICIZED DENSE CONCRETE OVERLAY (1 3/4" THICK)
850	15		15		850		15	CU.YD.	SUPERPLASTICIZED DENSE CONCRETE OVERLAY (VAR.THICKNESS) (BR. NO. LIC-16-1416L)
850	12		12		850		12	CU.YD.	SUPERPLASTICIZED DENSE CONCRETE OVERLAY (VAR.THICKNESS) (BR.NO. LIC-16-1560L)
850	12		12		850		12	CU.YD.	SUPERPLASTICIZED DENSE CONCRETE OVERLAY (VAR.THICKNESS) (BR.NO. LIC-16-1560R)
850	13		13		850		13	CU.YD.	SUPERPLASTICIZED DENSE CONCRETE OVERLAY (VAR.THICKNESS) (BR.NO. LIC-16-1594L)
850	13		13		850		13	CU.YD.	SUPERPLASTICIZED DENSE CONCRETE OVERLAY (VAR.THICKNESS) (BR.NO. LIC-16-1594R)
850		13		13	850		13	CU.YD.	SUPERPLASTICIZED DENSE CONCRETE OVERLAY (VAR.THICKNESS) (BR. NO. LIC-16-1773L)
850	LUMP		LUMP		850		LUMP		TEST SLAB
SPEC.	1894	378	1894	378	SPEC.		2272	SQ.YD.	SEALING OF CONCRETE SURFACES (EPOXY) (SEE PROPOSAL NOTE)

MICROFILMED
NOV 5 1992

CALC BY / DATE	LIC-37-15.61	OHIO	93
CHKD BY / DATE	LIC-16-14.26	FHWA REGION 5	123

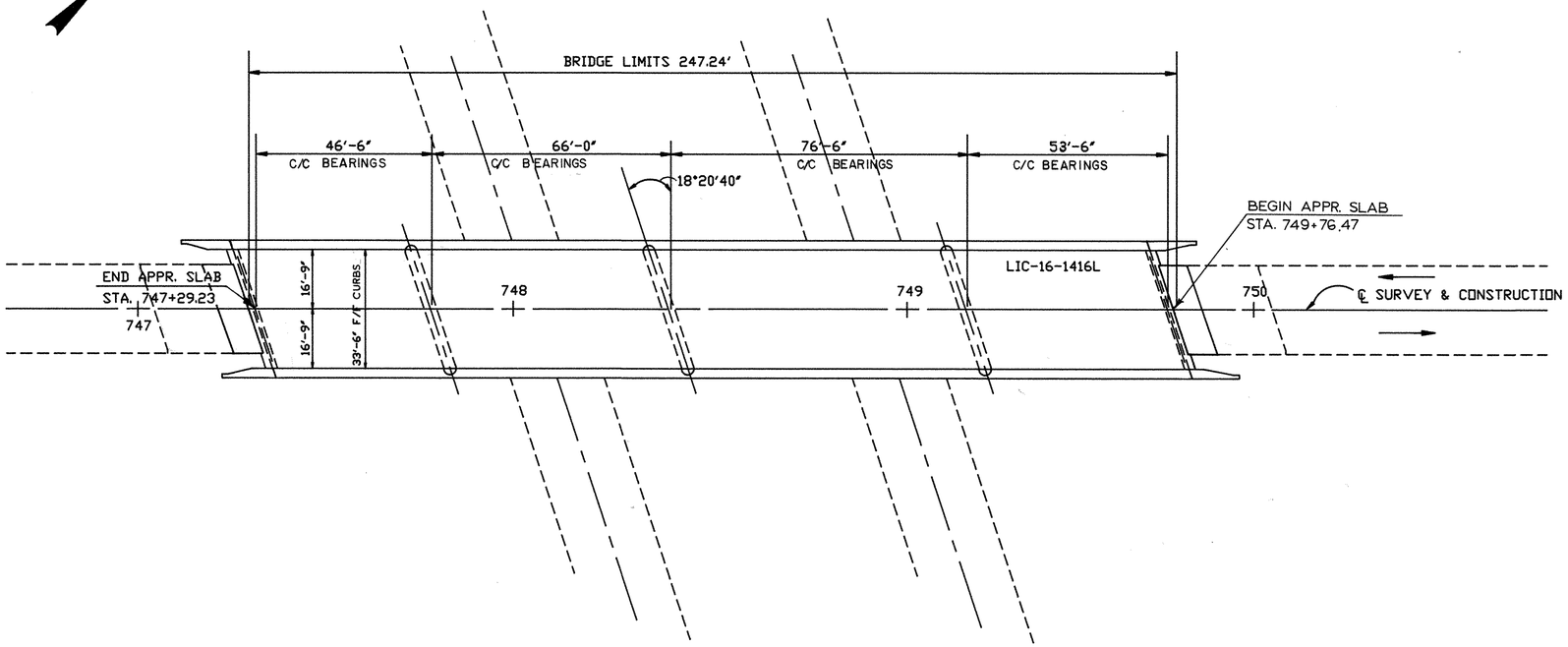

PLAN

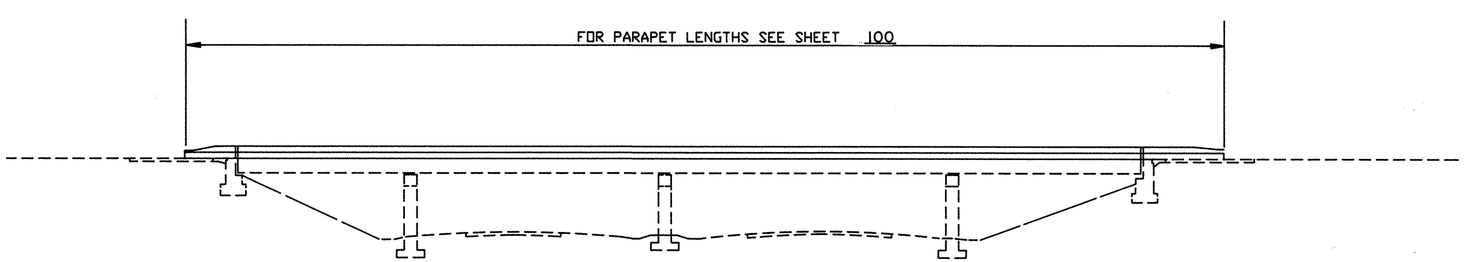

ELEVATION

EXISTING STRUCTURE:

TYPE: CONTINUOUS STEEL BEAM WITH REINFORCED CONCRETE DECK AND SUBSTRUCTURE

SPANS: 46'-6" - 66'-0" - 76'-6" - 53'-6" C/C BEARINGS

ROADWAY: 30'-0" F/F SAFETY CURBS

LOADING: CF400

SKEW: 18°20'40" RT.FWD.

WEARING SURFACE: 1" MONOLITHIC CONCRETE AND 2 3/4" ASPHALT

ALIGNMENT: TANGENT

APPROACH SLABS: 25'-0" LONG

REHABILITATED STRUCTURE

ROADWAY: 33'-6" F/F CURBS

BRIDGE RAILING: DEFLECTOR PARAPET TYPE

WEARING SURFACE: 1 3/4" SUPERPLASTICIZED DENSE CONCRETE OVERLAY

LIC-16-1416L

GENERAL PLAN AND ELEVATION

MICROFILMED
NOV 5 1992

CALC. BY	LIC-37-15.61	OHIO	94
DATE	LIC-16-14.26	FHWA REGION 5	123
CHKD. BY			
DATE			

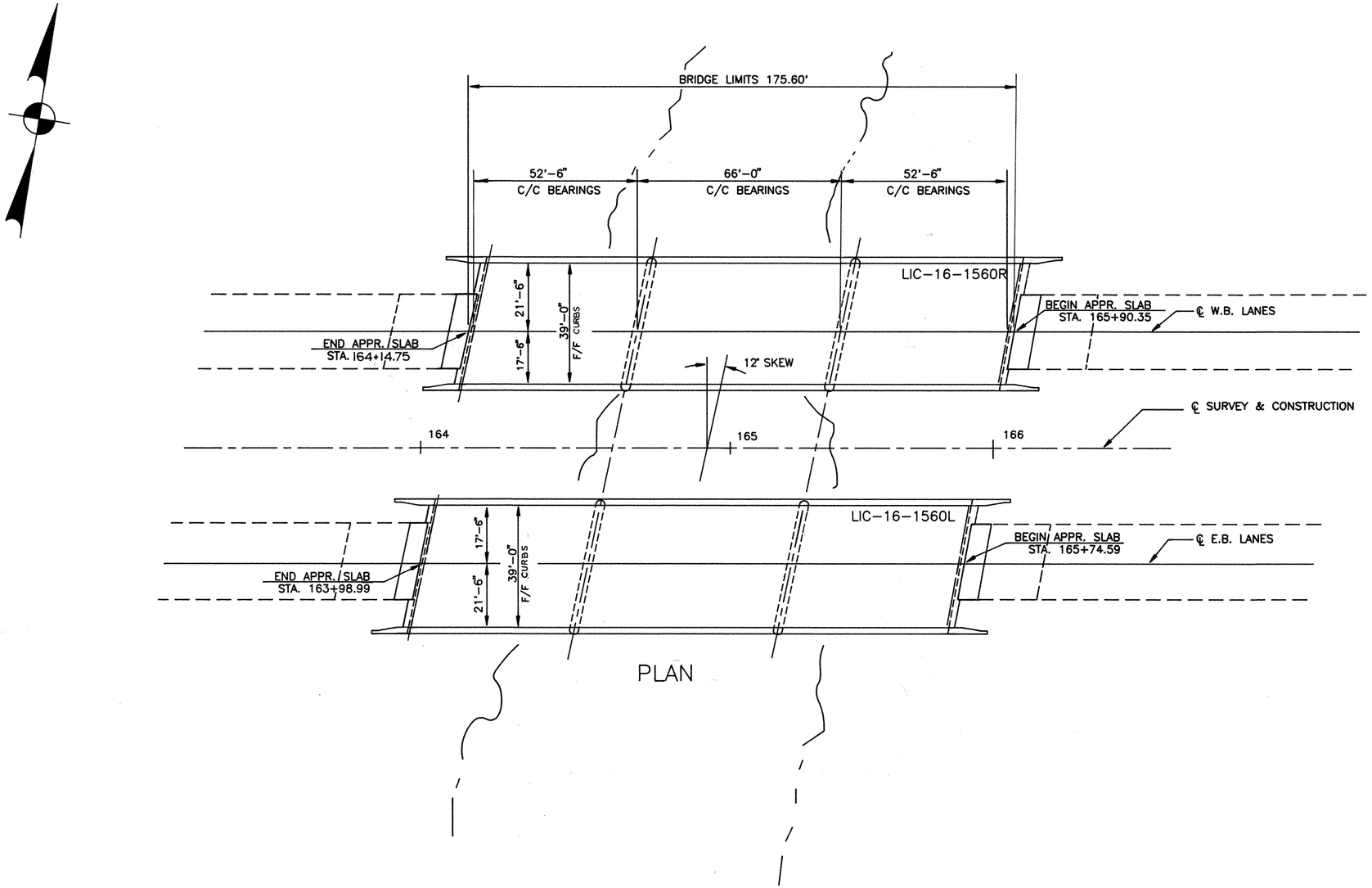

PLAN

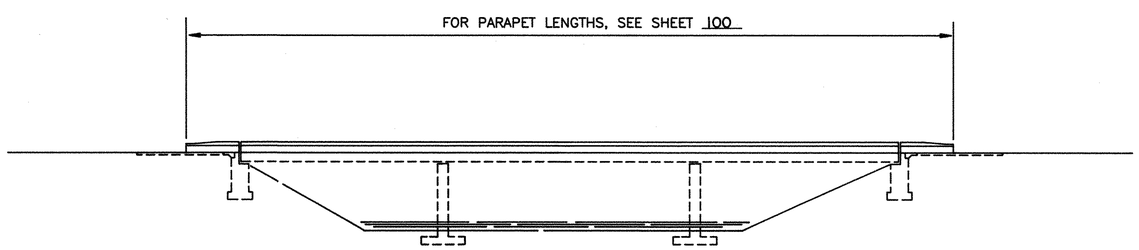

ELEVATION

EXISTING STRUCTURES:

TYPE: CONTINUOUS STEEL BEAMS WITH REINFORCED CONCRETE DECK AND SUBSTRUCTURE

SPANS: 52'-6" - 66'-0" - 52'-6"

ROADWAY: 40'-0" F/F CONCRETE PARAPETS

LOAD FREQUENCY: CF=2000 (57)

SKEW: 12° 0' L.F.

WEARING SURFACE: 1" MONOLITHIC CONCRETE & 2 1/2" ASPHALT (AVE.)

APPROACH SLABS: 25'-0" LONG

REHABILITATED STRUCTURE

ROADWAY: 39'-0" F/F CURBS

BRIDGE RAILING: DEFLECTOR PARAPET TYPE

WEARING SURFACE: 1 3/4" SUPERPLASTICIZED DENSE CONCRETE OVERLAY

L01161542 (C) 8/11/88

LIC-16-1560 L/R

GENERAL PLAN & ELEVATION

MICROFILMED
NOV 5 1992

CALC BY RSD DATE 10-17-88	LIC-37-15.61	OHIO	95
CHKD. BY DATE 10-19-88	LIC-16-14.26	FHWA REGION 5	123

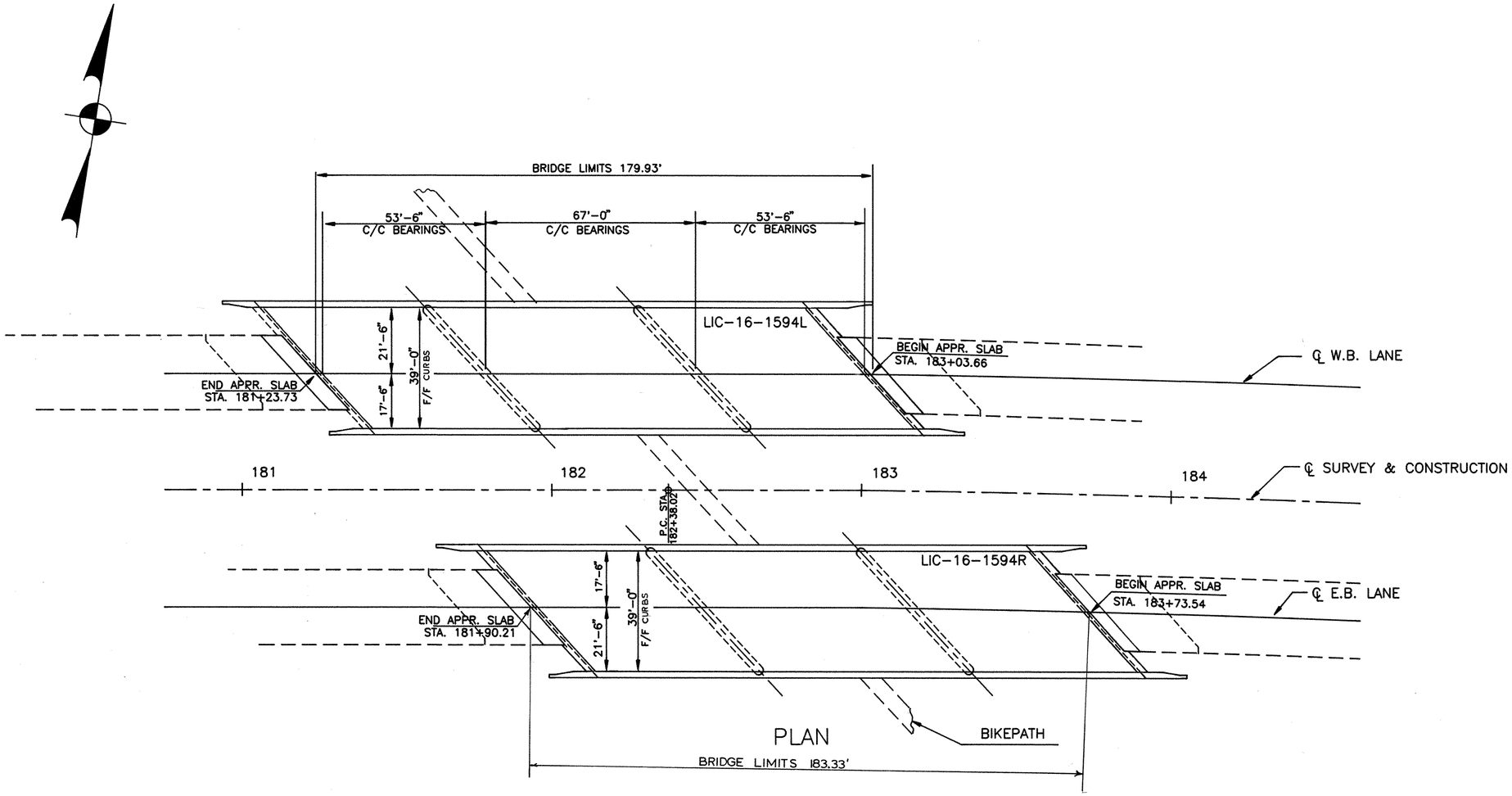

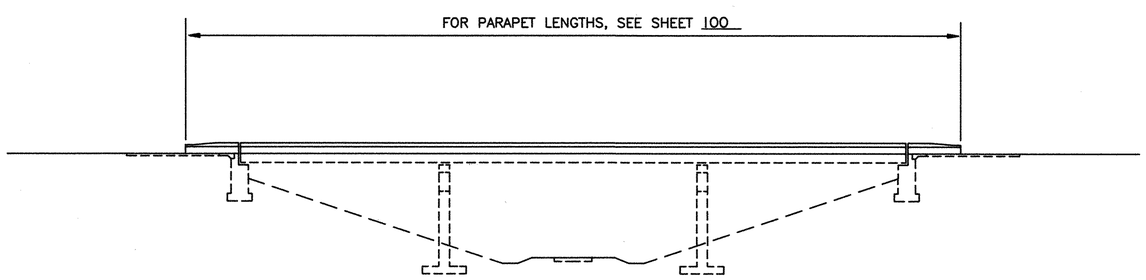

ELEVATION

EXISTING STRUCTURES :
TYPE: CONTINUOUS STEEL BEAMS WITH REINFORCED CONCRETE DECK AND SUBSTRUCTURE
SPANS: 53'-6" - 67'-0" - 53'-6" MEASURED ALONG TANGENT AT P.C.
ROADWAY: 40'-0" F/F CONCRETE PARAPETS
LOAD FREQUENCY: CF=2000 (57)
SKEW: 41°56' R.F.
WEARING SURFACE: 1" MONOLITHIC CONCRETE & 2 1/2" ASPHALT
APPROACH SLABS: 25'-0" LONG
SUPERELEVATION: VARIES, MAX. 0.04833 FT/FT

REHABILITATED STRUCTURE
ROADWAY: 39'-0" F/F CURBS
BRIDGE RAILING: DEFLECTOR PARAPET TYPE
WEARING SURFACE: 1 3/4" SUPERPLASTICIZED DENSE CONCRETE OVERLAY

LIC-16-1594 L/R

GENERAL PLAN & ELEVATION

L0161542 (C) 8/11/88

MICROFILMED
NOV 5 1992

CALC. BY RSP DATE 10-17-90	LIC-37-15.61	OHIO	96
CHKD. BY JWL DATE 11-19-92	LIC-16-14.26	FHWA REGION 5	123

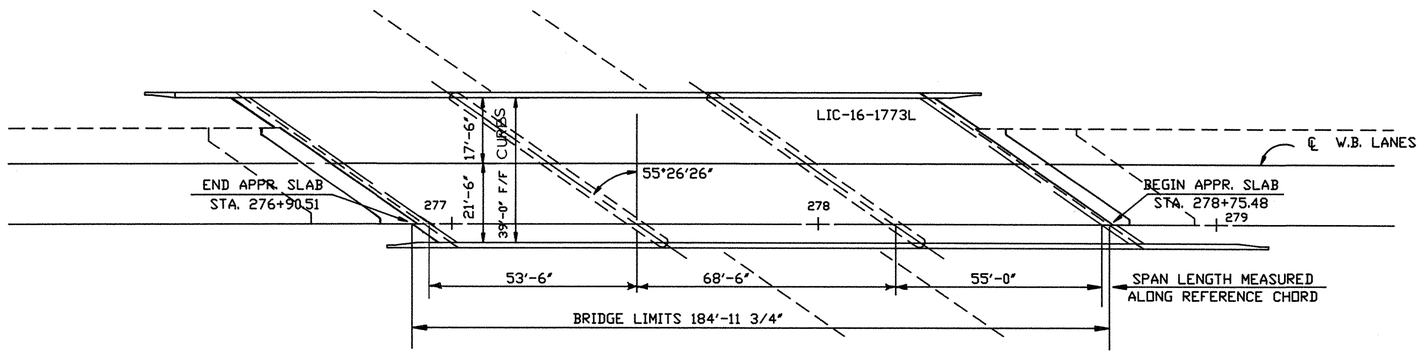

PLAN

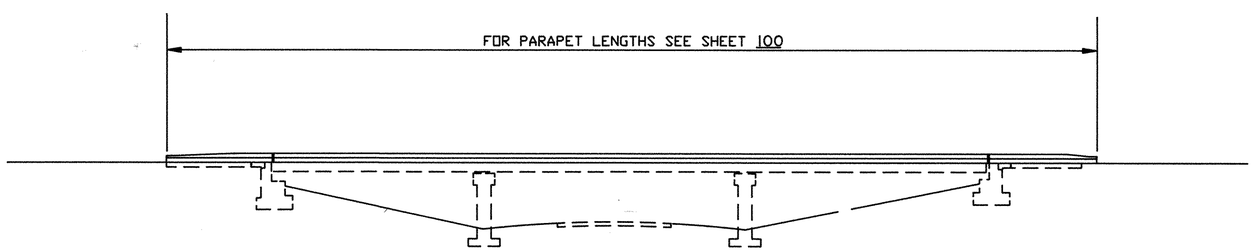

ELEVATION

EXISTING STRUCTURE

TYPE: CONTINUOUS STEEL BEAM WITH REINFORCED CONCRETE DECK AND SUBSTRUCTURE

SPANS: 53'-6", 68'-6", 55'-0" ALONG REFERENCE CHORD

ROADWAY: 40'-0" F/F PARAPETS

LOADING: CF 2000

SKEW: 55°26'26" WITH REFERENCE CHORD

WEARING SURFACE: 1" MONOLITHIC CONCRETE AND 2 1/2" ASPHALT

APPROACH SLAB: 25'-0" LONG

SUPERELEVATION: 0.047 FT/FT.

REHABILITATED STRUCTURE

ROADWAY: 39'-0" F/F CURBS

BRIDGE RAILING: DEFLECTOR PARAPET TYPE

WEARING SURFACE: 1 3/4" SUPERPLASTICIZED DENSE CONCRETE OVERLAY

GENERAL PLAN AND ELEVATION

MICROFILMED
NOV 5 1992

MODIFIED BARRIER

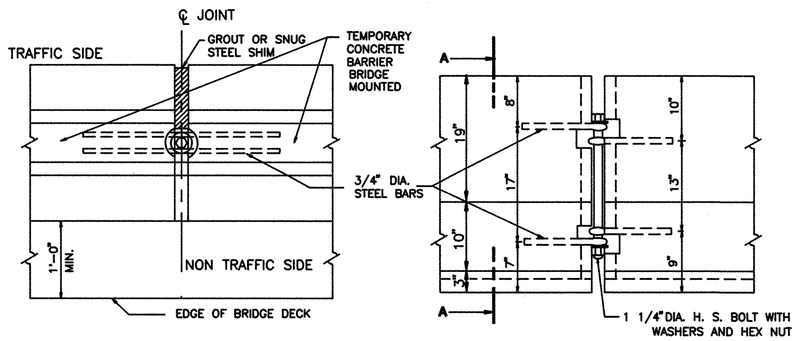

PLAN AT JOINT

ELEVATION AT JOINT

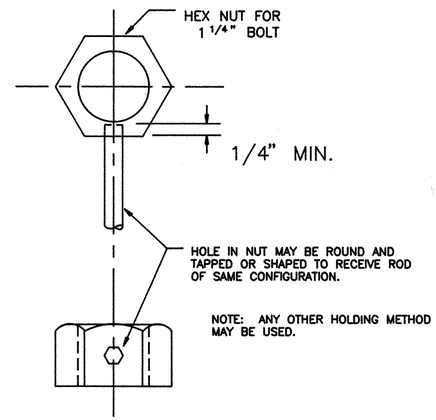

EXAMPLE OF METHOD FOR HOLDING NUT DURNING THREADED ROD INSTALLATION

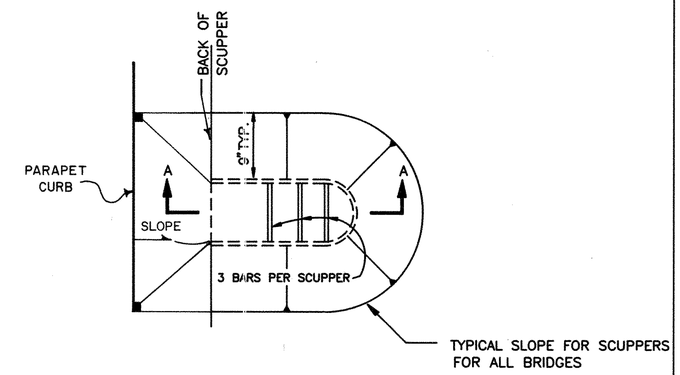

ITEM 622 – TEMPORARY CONCRETE BARRIER, BRIDGE MOUNTED

THE CONTRACTOR SHALL INSTALL THE BARRIER AS PER ST'D. DRAWING MC-9A. THE QUANTITY SHALL ALSO INCLUDE REMOVING AND REUSING THE BARRIER AS SHOWN IN PHASES.
AFTER THE PROJECT HAS BEEN COMPLETED THE BARRIER SHALL BECOME THE PROPERTY OF THE CONTRACTOR AND REMOVED BY HIM. ANCHORING OF ALL TEMPORARY CONCRETE BARRIER ON THE BRIDGE SHALL NOT BE REQUIRED. CONNECTIONS OF THE PARAPETS SHALL BE DONE BY USING 1 1/4" DIA. HIGH STRENGTH BOLTS.
PAYMENT FOR BOLTS, NUTS, WASHERS, LABOR, MATERIALS AND INCIDENTIALS SHALL BE INCLUDED ITEM 622 – TEMPORARY CONCRETE BARRIER, BRIDGE MOUNTED. QUANTITIES SHOWN ARE CARRIED IN THE ROADWAY QUANTITIES ON SHEET 27.

ITEM 622
TEMPORARY CONCRETE
BARRIER, BRIDGE MOUNTED

BRIDGE NUMBER	STATE, FEDERAL CLOSING DRIVING LANE	STATE, FEDERAL CLOSING PASSING LANE	CITY, STATE, FEDERAL CLOSING DRIVING LANE	CITY, STATE, FEDERAL CLOSING PASSING LANE
LIC-16-1560L	180	180		
LIC-16-1560R	180	180		
LIC-16-1594L	180	180		
LIC-16-1594R	180	180		
* LIC-16-1773L			190	190
SUB-TOTAL	720	720	190	190
TOTAL		1440		380

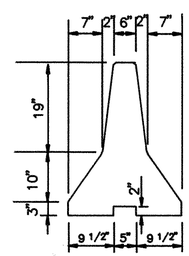

SECTION A–A

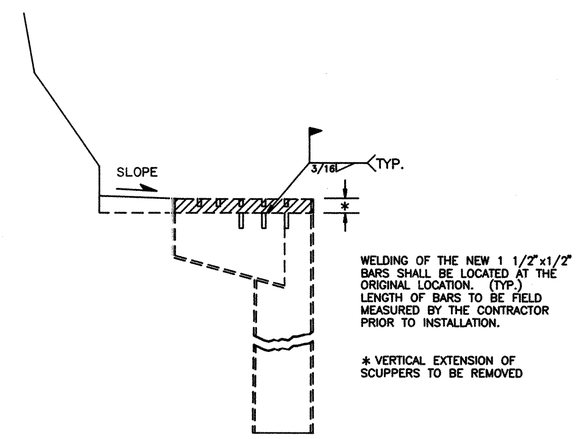

SECTION A–A

LIC-16-1560L – 14 EACH
LIC-16-1560R – 14 EACH
LIC-16-1594L – 7 EACH
LIC-16-1594R – 5 EACH
LIC-16-1773L – 6 EACH

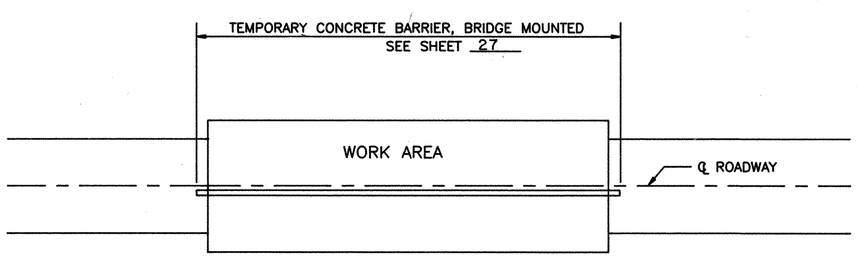

BARRIER DETAIL

BRIDGE DECK SURFACE PREPARATION:

THE PROCEDURE WHICH MUST BE FOLLOWED WHEN INSTALLING ALL TEMPORARY PRECAST CONCRETE BARRIERS, ON OHIO BRIDGE DECKS, ARE GIVEN BELOW.

A. THE BRIDGE DECK SURFACE AREA ON WHICH THE PRECAST CONCRETE BARRIERS WILL REST SHALL BE CLEARED OF ALL LOOSE SAND, GRAVEL, DIRT AND DEBRIS.

B: ANY IRREGULARITIES IN THE BRIDGE DECK AREA, UNLESS JUDGED BY THE ENGINEER TO BE INCONSEQUENTIAL, SHALL BE LEVELED WITH GROUT AND/OR ASPHALT.

C. ASPHALT ROLL ROOFING SHALL BE PLACED ON THOSE BRIDGE DECK AREAS AS JUDGED BY THE ENGINEER, TO HAVE A SURFACE ROUGHNESS WHICH WOULD INHIBIT FRICTION CONTACT BETWEEN BARRIER SEGMENTS AND DECK.

THE ABOVE WORK SHALL BE INCLUDED FOR PAYMENT IN ITEM 622–TEMPORARY CONCRETE BARRIER, BRIDGE MOUNTED, AND SHALL BE CARRIED IN THE ROADWAY QUANTITIES.

SCUPPER DETAILS

ITEM 202 VERTICAL EXTENSION OF SCUPPERS REMOVED, AS PER PLAN

CARE SHALL BE TAKEN IN THE REMOVAL OF THE EXISTING 2 1/4" VERTICAL SCUPPER EXTENSIONS SO AS NOT TO DAMAGE THE ORIGINAL SCUPPER AS DETAILED. THE SCUPPER EXTENSION SHALL BE REMOVED BY FLAME CUTTING AND DISPOSED OF BY THE CONTRACTOR. THE SURFACE OF THE ORIGINAL SCUPPER SHALL BE LEFT FREE OF ANY ROUGH AREAS AS DETERMINED BY THE ENGINEER. PAYMENT SHALL BE AT THE CONTRACT PRICE BID FOR 46 EA. OF ITEM 202–VERTICAL EXTENSION OF SCUPPERS REMOVED, AS PER PLAN WHICH SHALL INCLUDE ALL MATERIALS, LABOR, TOOLS AND INCIDENTALS NECESSARY TO COMPLETE THE ITEM.

NOTE: NEW SCUPPER BARS SHALL BE A36 AND SHALL BE FIELD PAINTED WITH SYSTEM B PAINT ACCORDING TO 514.05.
FINISH PAINT SHALL BE 708.09 (GREEN).
PAYMENT FOR NEW BARS AND PAINTNG SHALL BE INCLUDED IN THE CONTRACT PRICE BID FOR 46 EACH OF ITEM 518–SCUPPER REHABILITATION, AS PER PLAN WHICH SHALL INCLUDE ALL MATERIALS, LABOR, TOOLS AND INCIDENTIALS NECESSARY TO COMPLETE THE ITEM.

MICROFILMED
NOV 5 1992

CALC BY RSD DATE 12-17-88 / CHKD BY JWC DATE 01-19-89	LIC-37-15.61 LIC-16-14.26	OHIO FHWA REGION 5	98 / 123

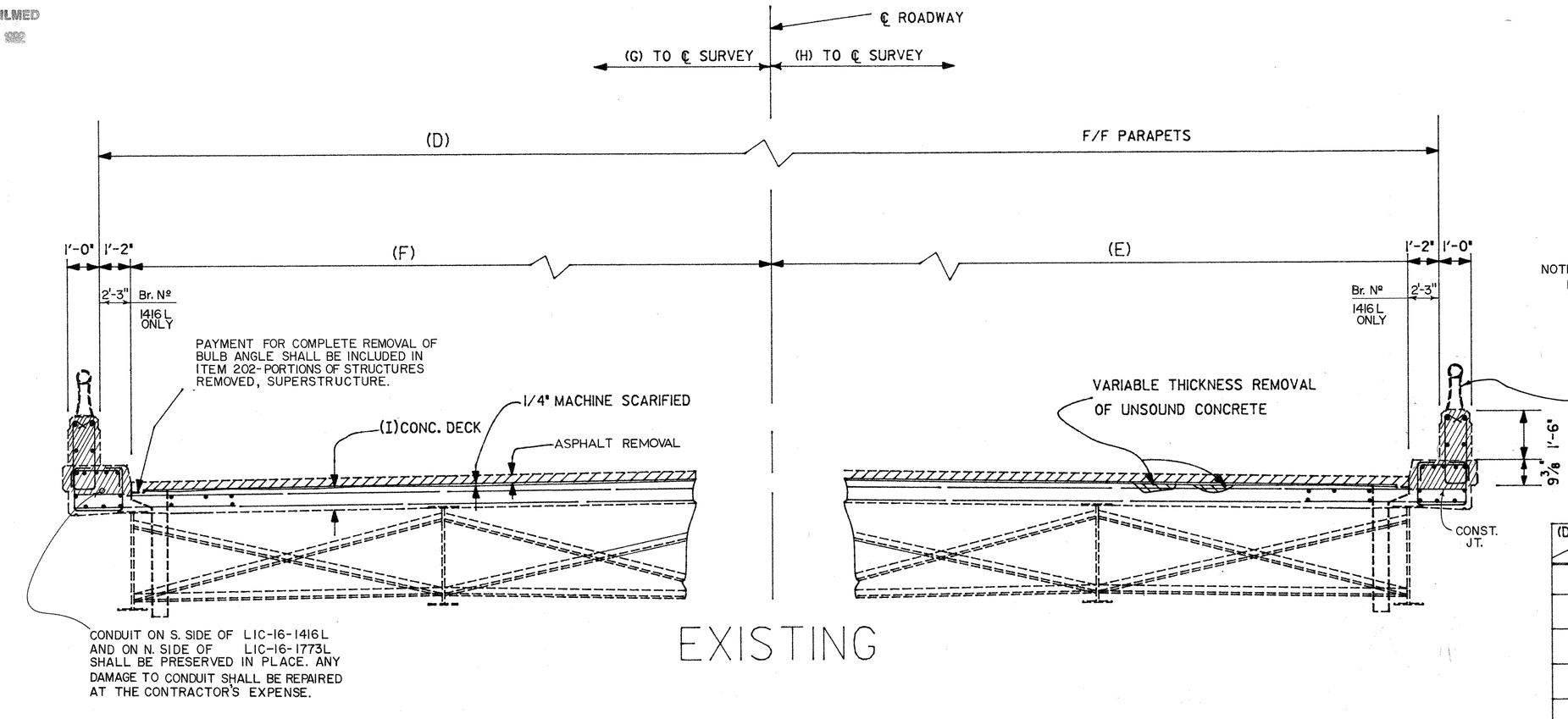

EXISTING

NOTE:
DECK RE-STEEL NOT TO BE DISTURBED.

REMOVALS

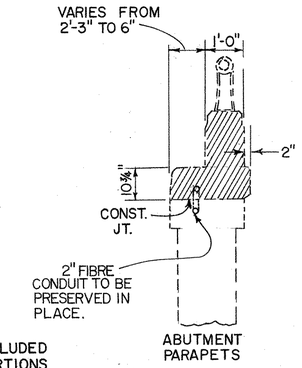

NOTE:
REMOVAL AND REPLACEMENT OF ABUTMENT PARAPETS SHALL BE INCLUDED WITH SUPERSTRUCTURE QUANTITIES.

(DIM.) / BRDG. NO.	LIC-16-1416L	LIC-16-1560L	LIC-16-1560R	LIC-16-1594L	LIC-16-1594R	LIC-16-1773L
(A)	33'-6"	39'-0"	39'-0"	39'-0"	39'-0"	39'-0"
(B)	16'-9"	17'-6"	21'-6"	17'-6"	21'-6"	17'-6"
(C)	16'-9"	21'-6"	17'-6"	21'-6"	17'-6"	21'-6"
(D)	34'-6"	40'-0"	40'-0"	40'-0"	40'-0"	40'-0"
(E)	15'-0"	16'-10"	20'-10"	16'-10"	20'-10"	16'-10"
(F)	15'-0"	20'-10"	16'-10"	20'-10"	16'-10"	20'-10"
(G)	—	—	37'-0"	—	37'-0"	—
(H)	—	37'-0"	—	37'-0"	—	—
(I)	8 1/4"	8 3/4"	8 3/4"	8 3/4"	8 3/4"	8 3/4"

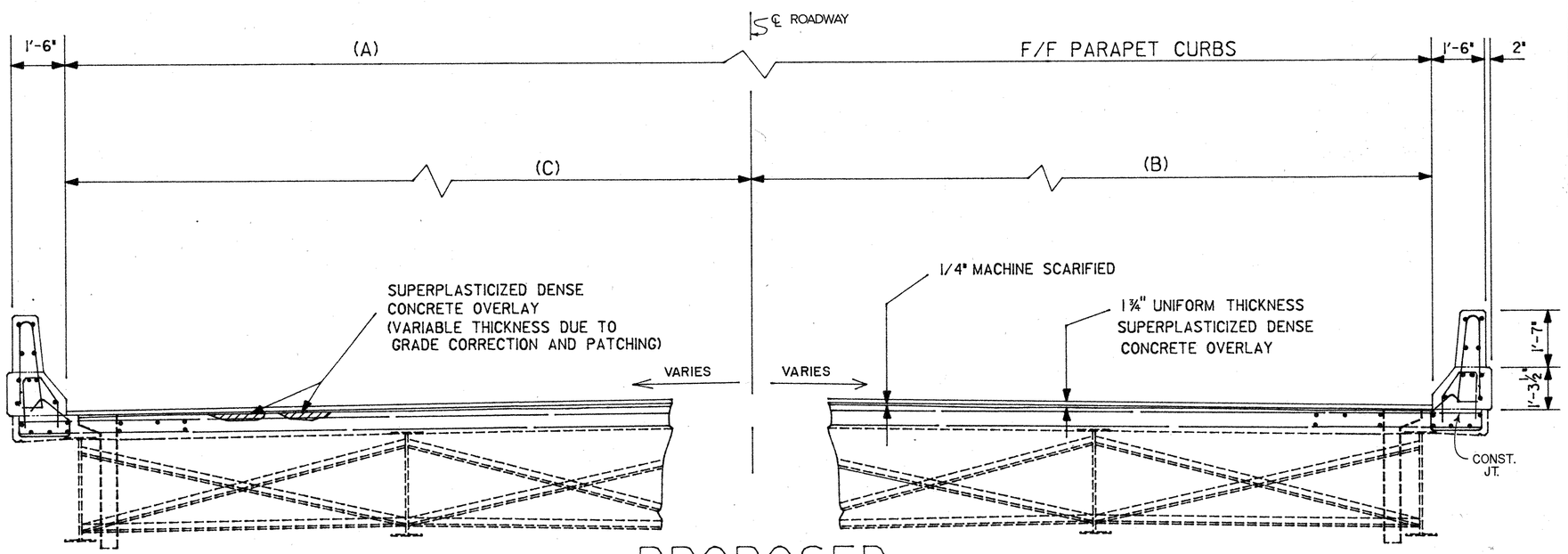

PROPOSED

DESCRIPTION	LIC 16 1416L	LIC 16 1560L	LIC 16 1560R	LIC 16 1594L	LIC 16 1594R	LIC 16 1773L	UNITS
ITEM 202 PORTIONS OF STRUCTURES REMOVED, SUPERSTRUCTURE	80	47	47	51	51	53	CU.YD.
ITEM 202 WEARING COURSE REMOVED	824	735	735	753	753	774	SQ.YD.
ITEM 850 TEST SLAB	LUMP						LUMP
ITEM 850 SUPERPLASTICIZED DENSE CONCRETE OVERLAY (1 3/4" THICK)	927	746	746	760	760	776	SQ.YD.

TRANSVERSE SECTIONS

MICROFILMED
NOV 5 1992

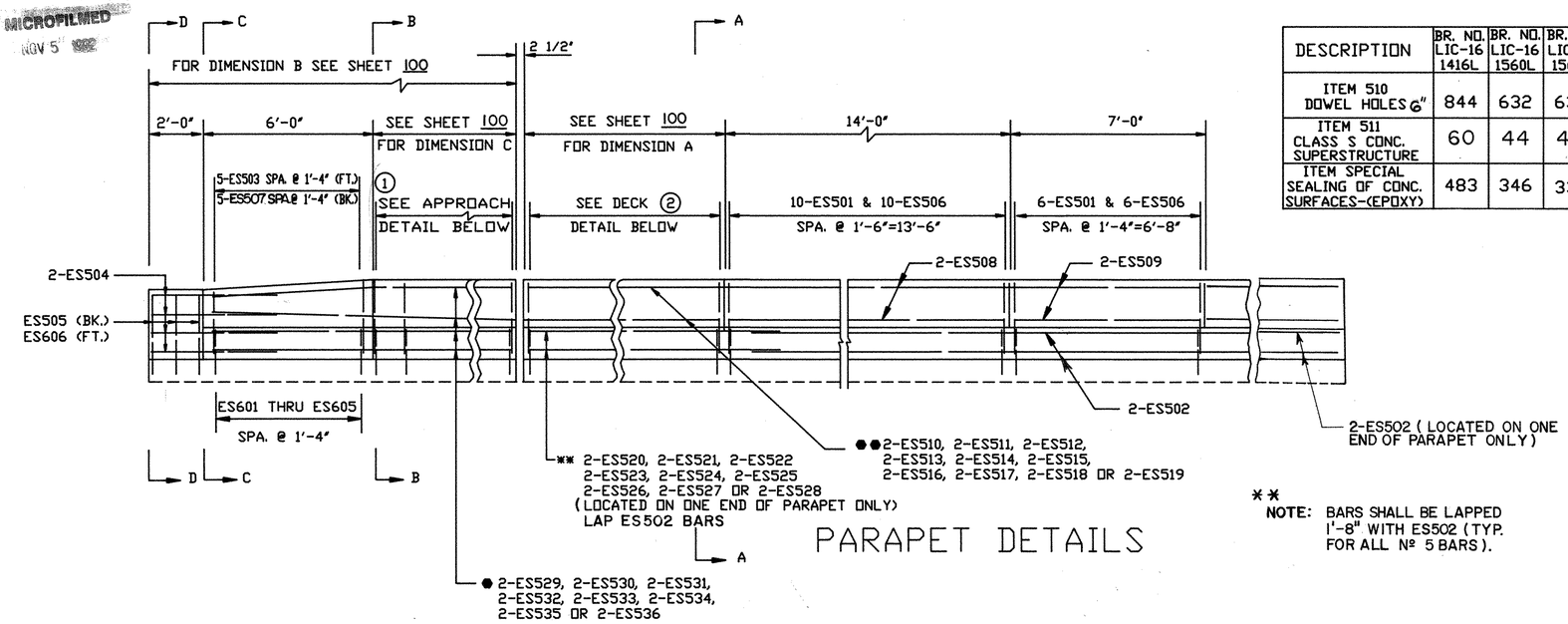

PARAPET DETAILS

DESCRIPTION	BR. NO. LIC-16 1416L	BR. NO. LIC-16 1560L	BR. NO. LIC-16 1560R	BR. NO. LIC-16 1594L	BR. NO. LIC-16 1594R	BR. NO. LIC-16 1773L	UNITS
ITEM 510 DOWEL HOLES 6"	844	632	632	654	658	686	EACH
ITEM 511 CLASS S CONC. SUPERSTRUCTURE	60	44	45	47	47	49	CU.YD.
ITEM SPECIAL SEALING OF CONC. SURFACES-(EPOXY)	483	346	337	363	365	378	SQ.YD.

** NOTE: BARS SHALL BE LAPPED 1'-8" WITH ES502 (TYP. FOR ALL Nº 5 BARS).

NOTE: DOWEL HOLES FOR ES505, ES506, ES601 THRU ES605 SHALL BE 6".

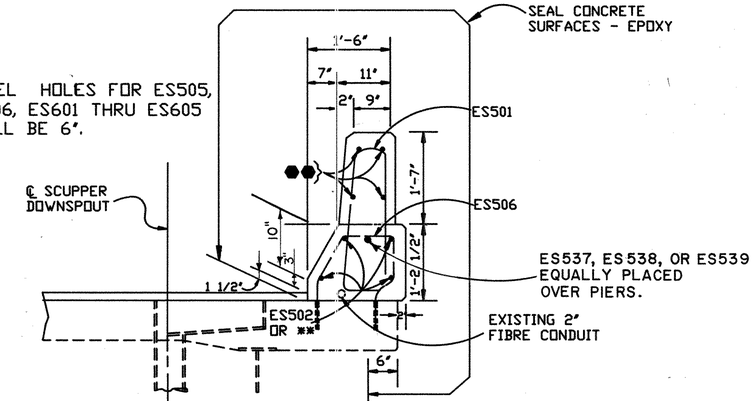

(ON BRIDGE DECK)
SECTION A-A

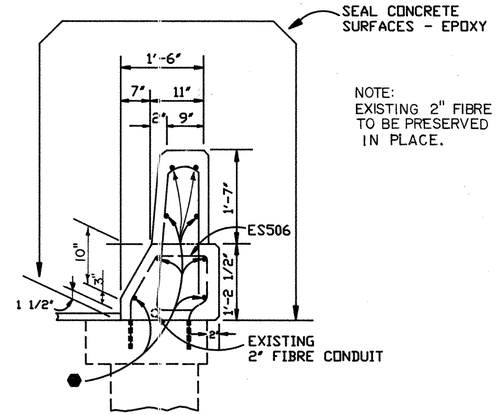

NOTE: EXISTING 2" FIBRE TO BE PRESERVED IN PLACE.

(ON ABUTMENT)
SECTION B-B

2"	8" 6"	*4-ES501 & 4-ES506 12-ES501 & 12-ES506	S.W. APPROACH S.E. APPROACH LIC-16-1773L (5'-6") (17'-4")
2"	7" 1'-5"	*11-ES501 & 11-ES506 4-ES501 & 4-ES506	N.W. APPROACH N.E. APPROACH LIC-16-1773L (5'-11") (6'-3")
2"	8" 1'-5"	*4-ES501 & 4-ES506 4-ES501 & 4-ES506	S.W. APPROACH S.E. APPROACH LIC-16-1594R (5'-6") (6'-3")
2"	10" 1'-2"	*6-ES501 & 6-ES506 7-ES501 & 7-ES506	N.W. APPROACH N.E. APPROACH LIC-16-1594R (8'-3") (10'-6")
2"	8" 1'-5"	*4-ES501 & 4-ES506 4-ES501 & 4-ES506	S.W. APPROACH S.E. APPROACH LIC-16-1594L (5'-3") (6'-3")
2"	1'-5" 1'-2"	*4-ES501 & 4-ES506 7-ES501 & 7-ES506	N.W. APPROACH N.E. APPROACH LIC-16-1594L (6'-3") (10'-6")
2"	5"	*4-ES501 & 4-ES506	(BOTH APPROACHES) LIC-16-1560R (5'-3")
2"	5"	*4-ES501 & 4-ES506	(BOTH APPROACHES) LIC-16-1560L (5'-3")
2"	1'-2"	*3-ES501 & 3-ES506	(BOTH APPROACHES) LIC-16-1416L (4'-0")

	3"	*10-ES501 & 10-ES506	(S. PARAPETS) LIC-16-1773L (13'-11")
	3"	*8-ES501 & 8-ES506	(N. PARAPETS) LIC-16-1773L (10'-11")
2"	3 1/2"	*8-ES501 & 8-ES506	(S. PARAPETS) LIC-16-1594R (11'-1½")
2"	1'-4 1/2"	*8-ES501 & 8-ES506	(N. PARAPETS) LIC-16-1594R (12'-2½")
2"	10"	*8-ES501 & 8-ES506	(S. PARAPETS) LIC-16-1594L (11'-8")
2"	7 1/2"	*8-ES501 & 8-ES506	(N. PARAPETS) LIC-16-1594L (11'-5½")
2"	1'-1 1/2"	*6-ES501 & 6-ES506	(S. PARAPETS) LIC-16-1560R (8'-11½")
2"	1'-5"	*6-ES501 & 6-ES506	(N. PARAPETS) LIC-16-1560R (9'-3")
2"	1'-2 1/2"	*6-ES501 & 6-ES506	(S. PARAPETS) LIC-16-1560L (9'-0½")
2"	4 1/2"	*6-ES501 & 6-ES506	(N. PARAPETS) LIC-16-1560L (8'-2½")
2"	8 1/2"	*7-ES501 & 7-ES506	(E. PARAPETS) LIC-16-1416L (10'-1")
2"	8"	*6-ES501 & 6-ES506	(W. PARAPETS) LIC-16-1416L (8'-6")

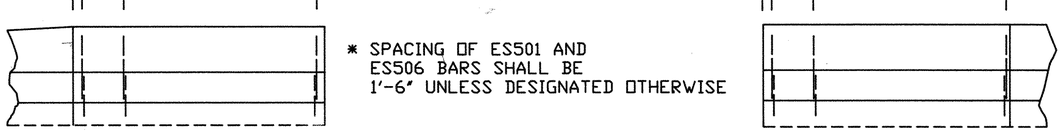

* SPACING OF ES501 AND ES506 BARS SHALL BE 1'-6" UNLESS DESIGNATED OTHERWISE

① END PARAPETS ON APPROACHES

② END PARAPETS ON DECK

RE-STEEL LOCATION

FOR ADDITIONAL PARAPET DETAILS, SEE STANDARD DRAWING NO. BR-1

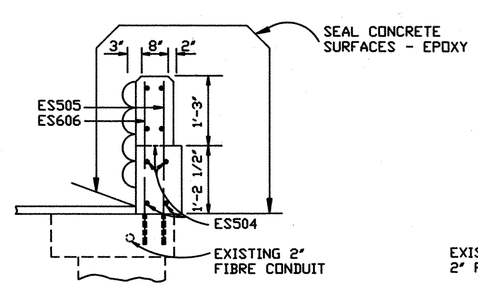

(ON ABUTMENT)
SECTION D-D

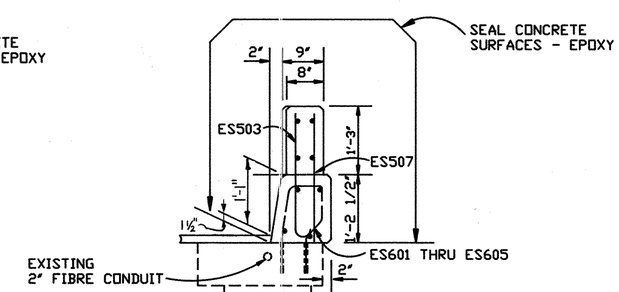

(ON ABUTMENT)
SECTION C-C

MICROFILMED
NOV 5 1992

CALC. BY DSD DATE 10-17-89
CHKD. BY GWC DATE 10-17-89
LIC-37-15.61
LIC-16-14.26
OHIO
FHWA REGION 5
100/123

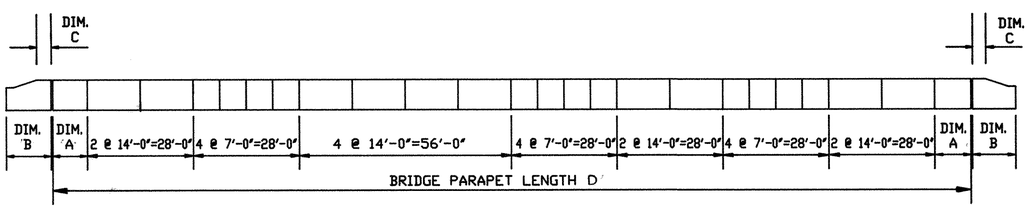

LIC-16-1416L

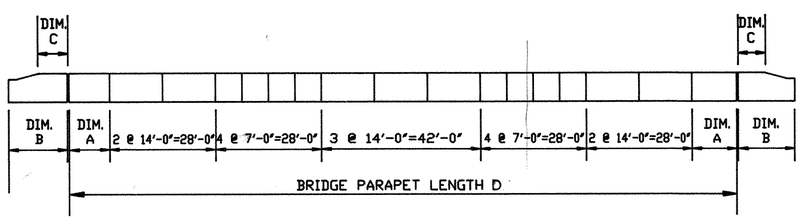

LIC-16-1560 L/R
LIC-16-1594 L/R
LIC-16-1773 L

BRIDGE NUMBER	PARAPET LOCATION	A DIMENSION	B DIMENSION	BRIDGE PARAPET LENGTH D	C DIMENSION
LIC-16-1416 L	WEST	8'-6"	12'-0"	241'-0"	4'-0"
LIC-16-1416 L	EAST	10'-1"	12'-0"	244'-1"	4'-0"
LIC-16-1560 L	NORTH	8'-2 1/2"	13'-3"	170'-5"	5'-3"
LIC-16-1560 L	SOUTH	9'-0 1/2"	13'-3"	172'-1"	5'-3"
LIC-16-1560 R	NORTH	9'-3"	13'-3"	172'-6"	5'-3"
LIC-16-1560 R	SOUTH	8'-11 1/2"	13'-3"	171'-11"	5'-3"
LIC-16-1594 L	NORTH	11'-5 1/2"	14'-3" Rr. 18'-6" FWD.	176'-11"	6'-3" Rr. 10'-6" FWD.
LIC-16-1594 L	SOUTH	11'-8"	13'-6" Rr. 14'-3" FWD.	177'-4"	5'-3" Rr. 6'-3" FWD.
LIC-16-1594 R	NORTH	12'-2 1/2"	16'-8" Rr. 18'-6" FWD.	178'-5"	8'-8" Rr. 10'-6" FWD.
LIC-16-1594 R	SOUTH	11'-1 1/2"	13'-6" Rr. 14'-3" FWD.	176'-3"	5'-6" Rr. 6'-3" FWD.
LIC-16-1773 L	NORTH	10'-11"	23'-11" Rr. 14'-3" FWD.	175'-10"	15'-11" Rr. 6'-3" FWD.
LIC-16-1773 L	SOUTH	13'-11"	13'-6" Rr. 25'-4" FWD.	181'-10"	5'-6" Rr. 17'-4" FWD.

LIC0161553

PARAPET DETAILS

EPOXY COATED REINFORCING STEEL – PARAPETS

MICROFILMED
NOV 5 1992

LIC–16–1416L

MARK	No. REQ'D NORTH PARAPET	No. REQ'D SOUTH PARAPET	LENGTH	SHAPE	WEIGHT NORTH PARAPET	WEIGHT SOUTH PARAPET
ES501	194	196	5'–3"	BT.	1062	1073
ES502	32	32	30'–0"	ST.	1001	1001
ES503	10	10	2'–8"	BT.	28	28
ES504	16	16	4'–4"	ST.	72	72
ES505	6	6	2'–9"	ST.	17	17
ES506	194	196	4'–0"	BT.	809	818
ES507	10	10	2'–3"	ST.	23	23
ES508	40	40	13'–8"	ST.	570	570
ES509	48	48	6'–8"	ST.	334	334
ES511	8	___	8'–2"	ST.	68	---
ES514	___	8	9'–11"	ST.	---	83
ES526	4	___	14'–0"	ST.	58	---
ES527	___	4	17'–1"	ST.	---	71
ES529	16	16	9'–8"	ST.	161	161
ES537	3	3	26'–0"	ST.	81	81
ES601	2	2	4'–0"	BT.	12	12
ES602	2	2	3'–10"	BT.	12	12
ES603	2	2	3'–8"	BT.	11	11
ES604	2	2	3'–7"	BT.	11	11
ES605	2	2	3'–5"	BT.	10	10
ES606	6	6	2'–9"	ST.	25	25
TOTALS					4365	4413

LIC–16–1560L

MARK	No. REQ'D NORTH PARAPET	No. REQ'D SOUTH PARAPET	LENGTH	SHAPE	WEIGHT NORTH PARAPET	WEIGHT SOUTH PARAPET
ES501	142	142	5'–3"	BT.	778	778
ES502	20	24	30'–0"	ST.	626	751
ES503	10	10	2'–8"	BT.	28	28
ES504	16	16	4'–4"	ST.	72	72
ES505	6	6	2'–9"	ST.	17	17
ES506	142	142	4"–0"	BT.	592	592
ES507	10	10	2'–3"	ST.	23	23
ES508	28	28	13'–8"	ST.	399	399
ES509	32	32	6'–8"	ST.	223	223
ES510	8	___	7'–10"	ST.	65	___
ES512	___	8	8'–7"	ST.	___	72
ES528	4	___	28'–5"	ST.	119	___
ES530	16	16	10'–9"	ST.	179	179
ES537	2	2	26'–0"	ST.	54	54
ES601	2	2	4'–0"	BT.	12	12
ES602	2	2	3'–10"	BT.	12	12
ES603	2	2	3'–8"	BT.	11	11
ES604	2	2	3'–7"	BT.	11	11
ES605	2	2	3'–5"	BT.	10	10
ES606	6	6	2'–9"	ST.	25	25
TOTALS					3256	3269

LIC–16–1560R

MARK	No. REQ'D NORTH PARAPET	No. REQ'D SOUTH PARAPET	LENGTH	SHAPE	WEIGHT NORTH PARAPET	WEIGHT SOUTH PARAPET
ES501	142	142	5'–3"	BT.	778	778
ES502	24	24	30'–0"	ST.	751	751
ES503	10	10	2'–8"	BT.	28	28
ES504	16	16	4'–4"	ST.	72	72
ES505	6	6	2'–9"	ST.	17	17
ES506	142	142	4"–0"	BT.	592	592
ES507	10	10	2'–3"	ST.	23	23
ES508	28	28	13'–8"	ST.	399	399
ES509	32	32	6'–8"	ST.	223	223
ES512	___	8	8'–7"	ST.	___	72
ES513	8	___	8'–11"	ST.	74	___
ES530	16	16	10'–9"	ST.	179	179
ES537	2	2	26'–0"	ST.	54	54
ES601	2	2	4'–0"	BT.	12	12
ES602	2	2	3'–10"	BT.	12	12
ES603	2	2	3'–8"	BT.	11	11
ES604	2	2	3'–7"	BT.	11	11
ES605	2	2	3'–5"	BT.	10	10
ES606	6	6	2'–9"	ST.	25	25
TOTALS					3271	3269

LIC–16–1594L

MARK	No. REQ'D NORTH PARAPET	No. REQ'D SOUTH PARAPET	LENGTH	SHAPE	WEIGHT NORTH PARAPET	WEIGHT SOUTH PARAPET
ES501	142	146	5'–3"	BT.	816	799
ES502	24	24	30'–0"	ST.	751	751
ES503	10	10	2'–8"	BT.	28	28
ES504	16	16	4'–4"	ST.	72	72
ES505	6	6	2'–9"	ST.	17	17
ES506	149	146	4"–0"	BT.	622	609
ES507	10	10	2'–3"	ST.	23	23
ES508	28	28	13'–8"	ST.	399	399
ES509	32	32	6'–8"	ST.	223	223
ES516	8	___	11'–1"	ST.	92	___
ES517	___	8	11'–4"	ST.	___	95
ES522	4	___	6'–7"	ST.	27	___
ES523	___	4	7'–0"	ST.	___	29
ES531	___	8	11'–2"	ST.	___	93
ES532	8	8	11'–9"	ST.	98	98
ES534	8	___	16'–2"	ST.	135	___
ES538	2	2	26'–10"	ST.	56	56
ES601	2	2	4'–0"	BT.	12	12
ES602	2	2	3'–10"	BT.	12	12
ES603	2	2	3'–8"	BT.	11	11
ES604	2	2	3'–7"	BT.	11	11
ES605	2	2	3'–5"	BT.	10	10
ES606	6	6	2'–9"	ST.	25	25
TOTALS					3440	3373

LIC–16–1594R

MARK	No. REQ'D NORTH PARAPET	No. REQ'D SOUTH PARAPET	LENGTH	SHAPE	WEIGHT NORTH PARAPET	WEIGHT SOUTH PARAPET
ES501	151	146	5'–3"	BT.	827	799
ES502	24	24	30'–0"	ST.	751	751
ES503	10	10	2'–8"	BT.	28	28
ES504	16	16	4'–4"	ST.	72	72
ES505	12	12	2'–9"	ST.	34	34
ES506	151	146	4'–0"	BT.	630	609
ES507	10	10	2'–3"	ST.	23	23
ES508	28	28	13'–8"	ST.	399	399
ES509	32	32	6'–8"	ST.	223	223
ES515	___	8	10'–7"	ST.	___	88
ES518	8	___	11–10"	ST.	99	___
ES521	___	4	5'–11"	ST.	___	25
ES524	4	___	8'–1"	ST.	34	___
ES531	___	8	11'–2"	ST.	___	93
ES532	___	8	11'–9"	ST.	___	98
ES533	8	___	14'–4"	ST.	120	___
ES534	8	___	16'–2"	ST.	135	___
ES538	2	2	26'–10"	ST.	56	56
ES601	2	2	4'–0"	BT.	12	12
ES602	2	2	3'–10"	BT.	12	12
ES603	2	2	3'–8"	BT.	11	11
ES604	2	2	3'–7"	BT.	11	11
ES605	2	2	3'–5"	BT.	10	10
ES606	6	6	2'–9"	ST.	25	25
TOTALS					3512	3379

LIC–16–1773L

MARK	No. REQ'D NORTH PARAPET	No. REQ'D SOUTH PARAPET	LENGTH	SHAPE	WEIGHT NORTH PARAPET	WEIGHT SOUTH PARAPET
ES501	153	158	5'–3"	BT.	838	865
ES502	24	24	30'–0"	ST.	751	751
ES503	10	10	2'–8"	BT.	28	28
ES504	16	16	4'–4"	ST.	72	72
ES505	6	6	2'–9"	ST.	17	17
ES506	153	158	4'–0"	BT.	638	659
ES507	10	10	2'–3"	ST.	23	23
ES508	28	28	13'–8"	ST.	399	399
ES509	32	32	6'–8"	ST.	223	223
ES515	8	___	10'–7"	ST.	88	___
ES519	___	8	13'–7"	ST.	___	113
ES520	4	___	5'–6"	ST.	23	___
ES525	___	4	11'–5"	ST.	___	48
ES531	___	8	11'–2"	ST.	___	93
ES532	8	___	11'–9"	ST.	98	___
ES535	8	___	21'–7"	ST.	180	___
ES536	___	8	23'–0"	ST.	___	192
ES539	2	2	26'–6"	ST.	55	55
ES601	2	2	4'–0"	BT.	12	12
ES602	2	2	3'–10"	BT.	12	12
ES603	2	2	3'–8"	BT.	11	11
ES604	2	2	3'–7"	BT.	11	11
ES605	2	2	3'–5"	BT.	10	10
ES606	6	6	2'–9"	ST.	25	25
TOTALS					3514	3619

NOTE: PREFIX "E" IN THE BAR MARK INDICATES EPOXY COATED REINFORCING STEEL.

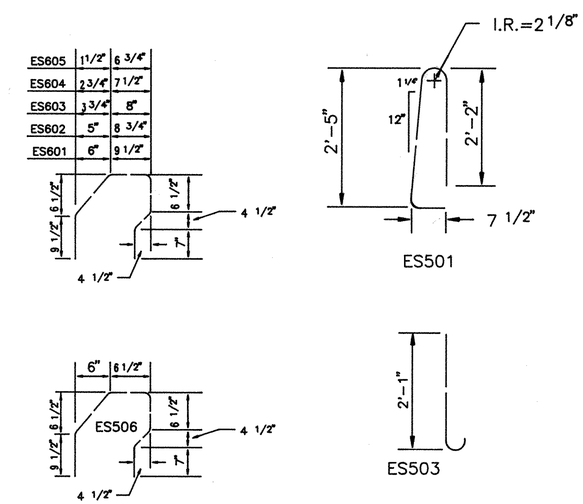

BENDING DIAGRAM

LD161555 (C) 8/19/88

MICROFILMED
NOV 5 1992

FHWA REGION	STATE	PROJECT	
5	OHIO		

102
123

LIC-37-15.61
LIC-16-14.26

CALCULATED BY RSD DATE 10-17-88
CHECKED BY JWC DATE 01-19-89

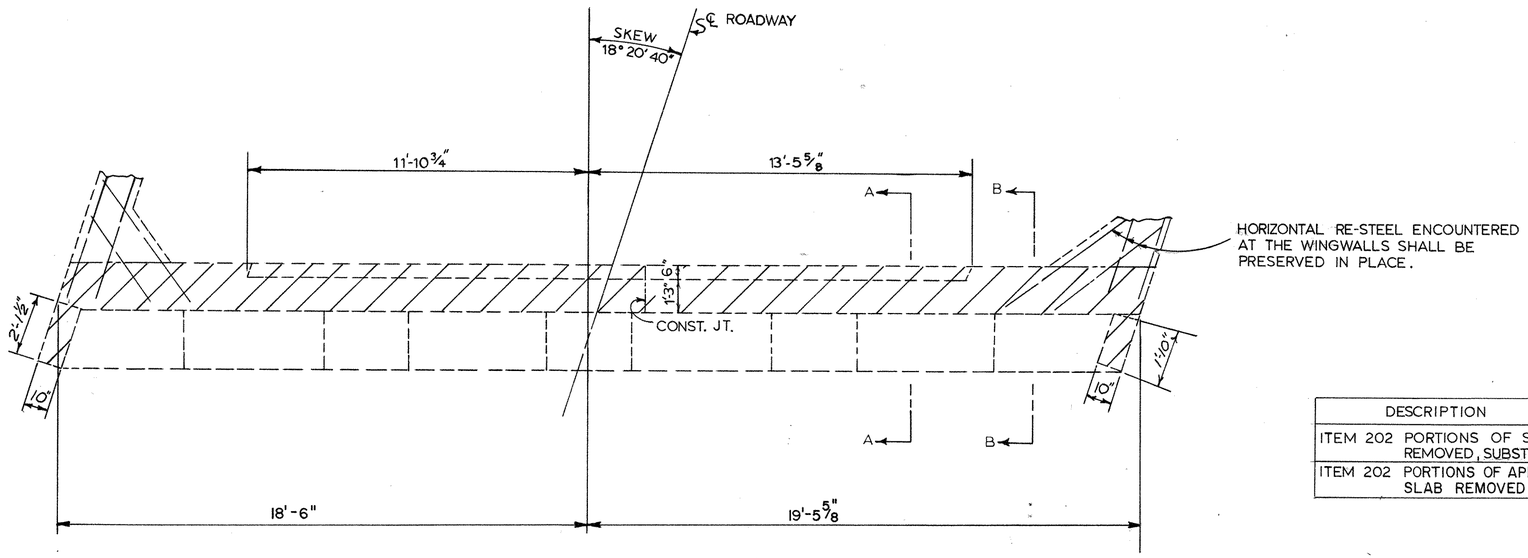

PLAN

NOTE: NORTH ABUTMENT IS OPPOSITE HAND TO SOUTH ABUTMENT

DESCRIPTION	QUANT.	UNIT
ITEM 202 PORTIONS OF STRUCTURES REMOVED, SUBSTRUCTURE	20	CU. YD.
ITEM 202 PORTIONS OF APPROACH SLAB REMOVED	34	SQ. YD.

NOTE: RE-STEEL ABOVE CONST. JT. SHALL BE REMOVED UNLESS SPECIFIED OTHERWISE.

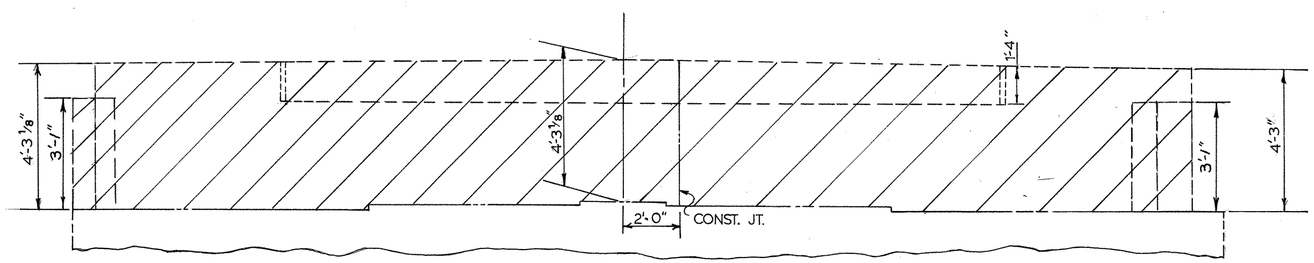

ELEVATION
NORTH ABUTMENT

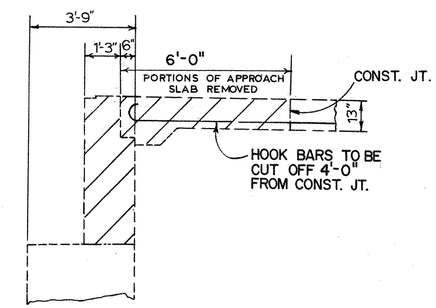

SECTION A-A

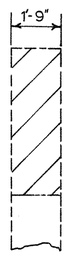

SECTION B-B

LIC-16-1416L

ABUTMENT REMOVALS

MICROFILMED
NOV 5 1992

FHWA REGION	STATE	PROJECT	
5	OHIO		

103
123

LIC-37-15.61
LIC-16-14.26

CALCULATED BY RSD DATE 10-17-88
CHECKED BY GWC DATE 01-13-89

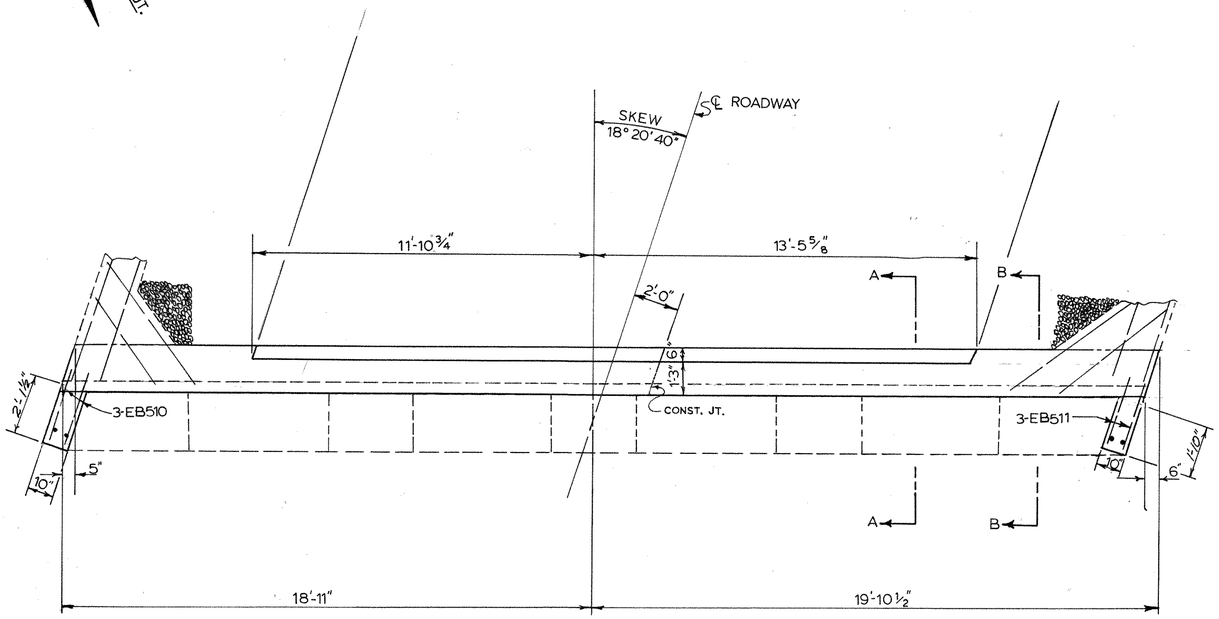

PLAN

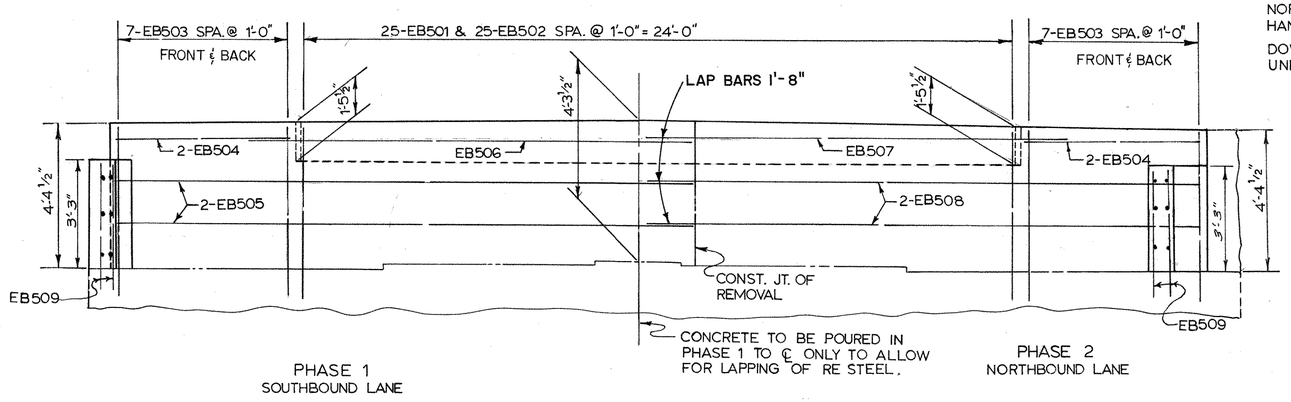

ELEVATION

NOTE:
NORTH ABUTMENT IS OPPOSITE HAND TO SOUTH ABUTMENT

DOWEL HOLES SHALL BE 1'-0" UNLESS OTHERWISE SPECIFIED.

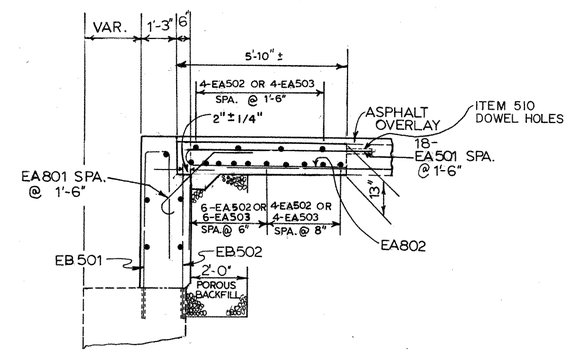

SECTION A-A

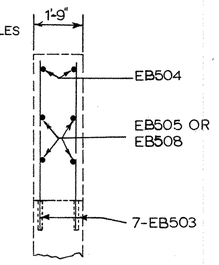

SECTION B-B

BOTH ABUTMENTS

DESCRIPTION	QUANT.	UNIT
ITEM 510 DOWEL HOLES 12"	200	EACH
ITEM 511 CLASS C CONCRETE, ABUTMENTS	20	CU. YD.
ITEM 518 POROUS BACKFILL	22	CU. YD.
ITEM 611 REINFORCED CONCRETE APPROACH SLAB (T=15"), AS PER PLAN	34	SQ. YD.

NOTE:
FOR RE-STEEL SCHEDULE SEE SHEET 112.

LIC-16-1416L
PROPOSED ABUTMENTS

MICROFILMED
NOV 5 1992

FHWA REGION	STATE	PROJECT	
5	OHIO		

104
123

LIC-37-15.61
LIC-16-14.26

CALCULATED BY RSD DATE 10-17-88
CHECKED BY GWC DATE 01-19-89

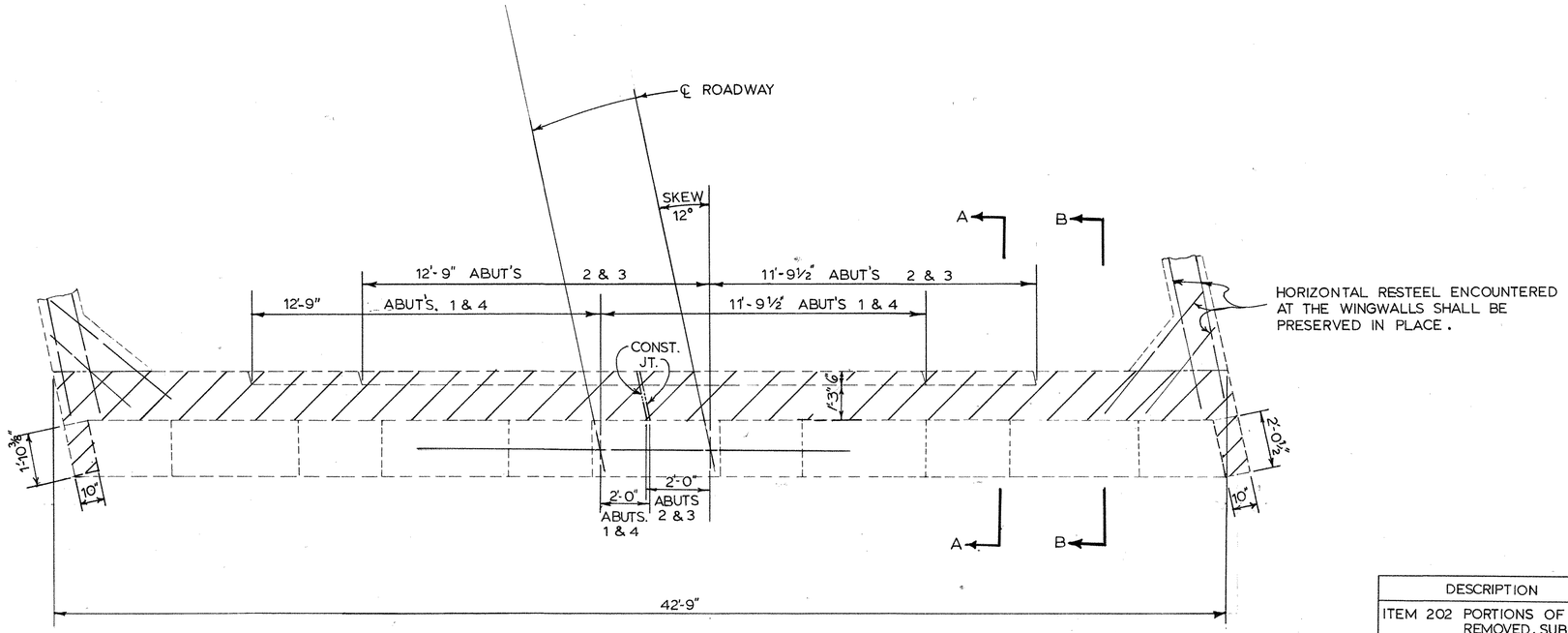

PLAN

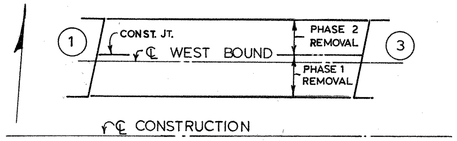

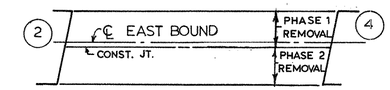

ABUTMENT NUMBERS

DESCRIPTION	QUANT.	UNIT
ITEM 202 PORTIONS OF STRUCTURES REMOVED, SUBSTRUCTURE	42	CU.YD.
ITEM 202 PORTIONS OF APPROACH SLAB REMOVED	66	SQ. YD.

NOTE: RESTEEL ABOVE CONST. JT. SHALL BE REMOVED UNLESS SPECIFIED OTHERWISE.

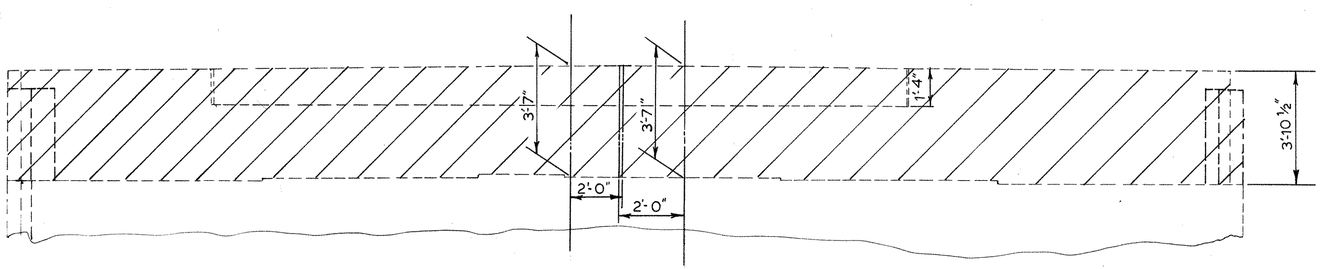

ELEVATION

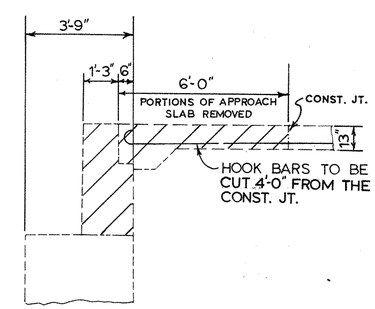

SECTION A-A

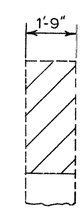

SECTION B-B

LIC-16-1560 L/R

ABUTMENT REMOVALS

MICROFILMED
NOV 5 1992

CALCULATED BY RSD DATE 10-17-88
CHECKED BY JWC DATE 01-10-89

FHWA REGION	STATE	PROJECT	
5	OHIO		

LIC-37-15.61
LIC-16-14.26

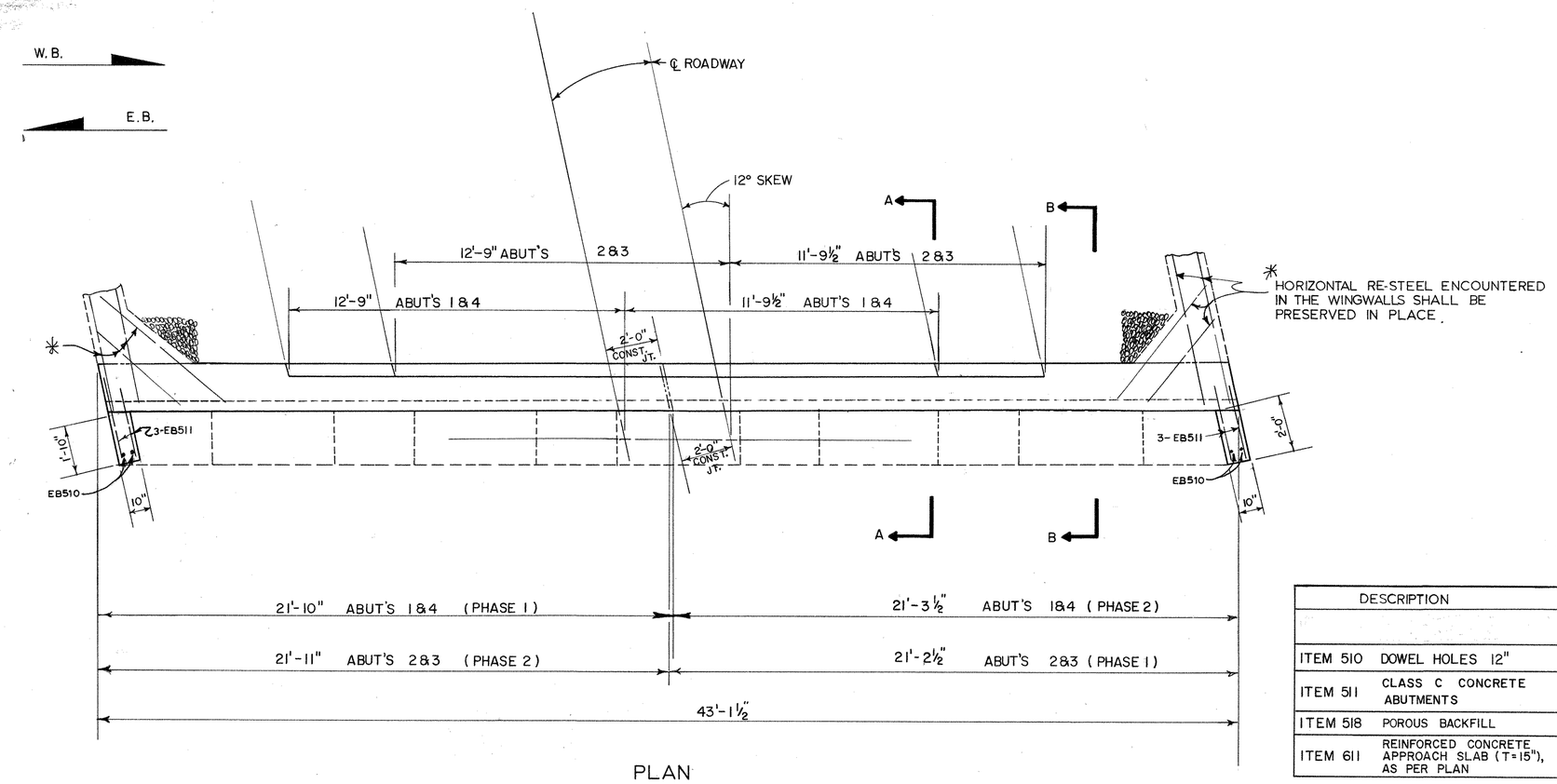

PLAN

DESCRIPTION		QUANT.	UNIT
ITEM 510	DOWEL HOLES 12"	428	EACH
ITEM 511	CLASS C CONCRETE ABUTMENTS	40	CU.YD.
ITEM 518	POROUS BACKFILL	40	CU.YD.
ITEM 611	REINFORCED CONCRETE APPROACH SLAB (T=15"), AS PER PLAN	64	SQ.YD.

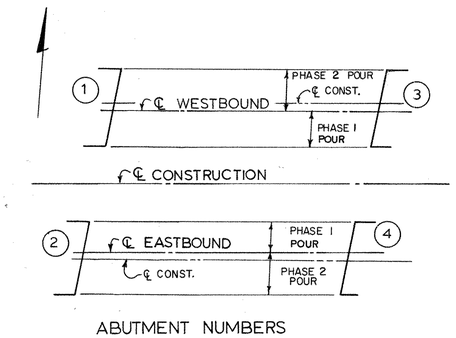

ABUTMENT NUMBERS

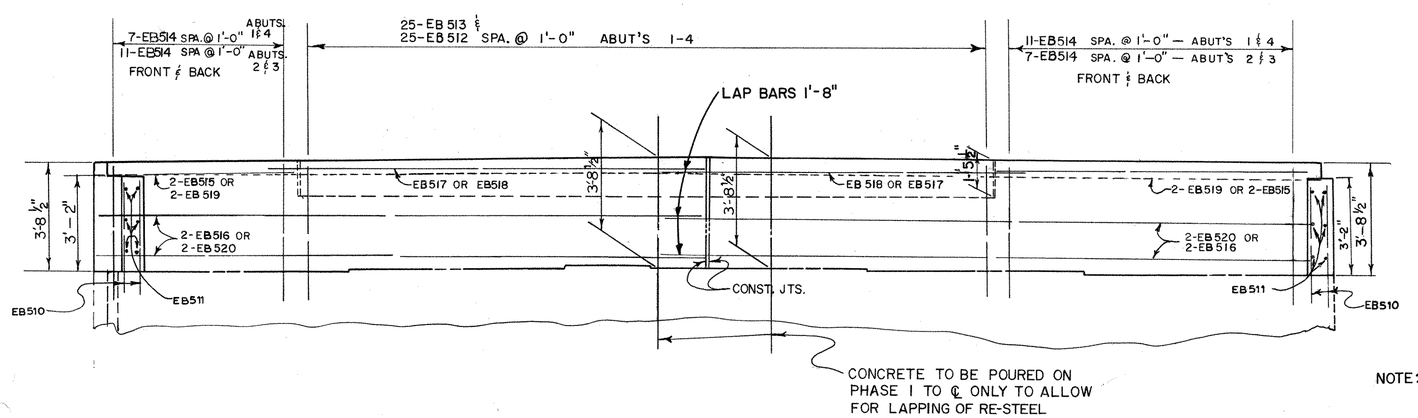

ELEVATION

NOTE: ALL DOWEL HOLES SHALL BE 1'-0" UNLESS OTHERWISE SPECIFIED.

FOR RE-STEEL SCHEDULE SEE SHEET 112.

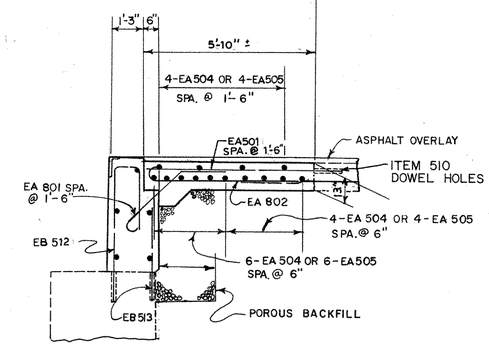

SECTION A-A

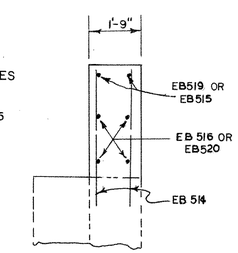

SECTION B-B

LIC-16-1560 L/R

PROPOSED ABUTMENTS

AUG 5 1992
NOV 5 1992

DESIGNATED BY RSD DATE 10-17-88
CHECKED BY JWC DATE 01-19-89

FHWA REGION	STATE	PROJECT	
5	OHIO		

LIC-37-15.61
LIC-16-14.26

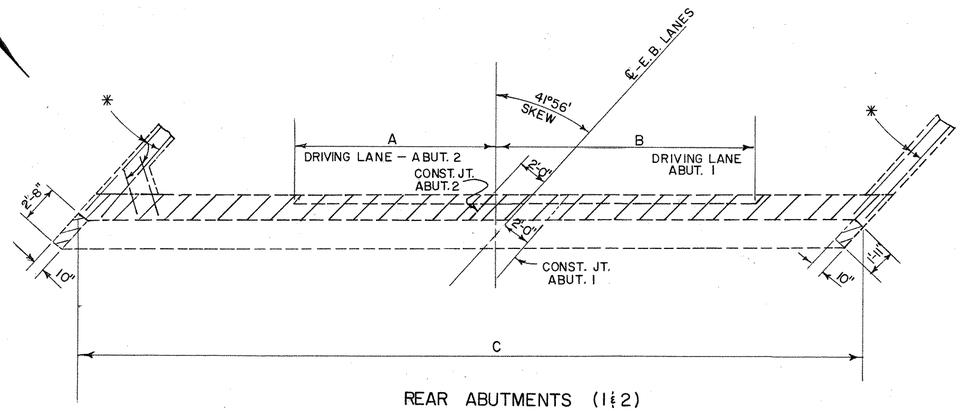

REAR ABUTMENTS (1 & 2)
PLAN

✱ NOTE:
HORIZONTAL RE-STEEL ENCOUNTERED AT THE WINGWALLS SHALL BE PRESERVED IN PLACE.

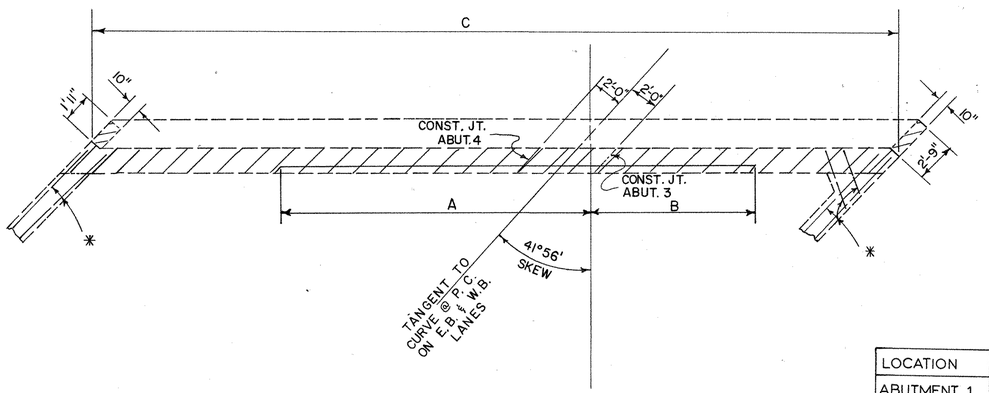

FWD. ABUTMENTS (3 & 4)
PLAN

DESCRIPTION	QUANT	UNIT
ITEM 202 PORTIONS OF STRUCTURES REMOVED, SUBSTRUCTURE	48	CU. YD.
ITEM 202 PORTIONS OF APPROACH SLAB REMOVED	84	SQ. YD.

DIMENSIONS

LOCATION	A	B	C
ABUTMENT 1	14'-1 3/8"	18'-1 7/8"	54'-10"
ABUTMENT 2	14'-1 3/8"	18'-1 7/8"	54'-10"
ABUTMENT 3	19'-2"	13'-7 1/8"	56'-11"
ABUTMENT 4	21'-10 3/8"	11'-5 7/8"	58'-0 1/2"

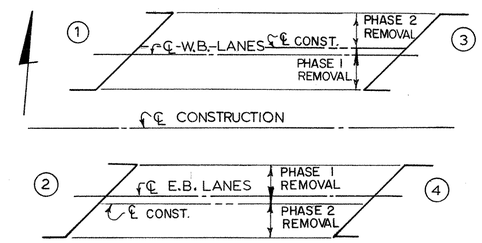

ABUTMENT NUMBERS

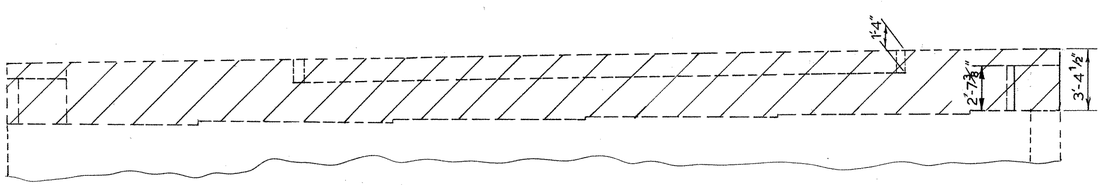

TYPICAL ELEVATION

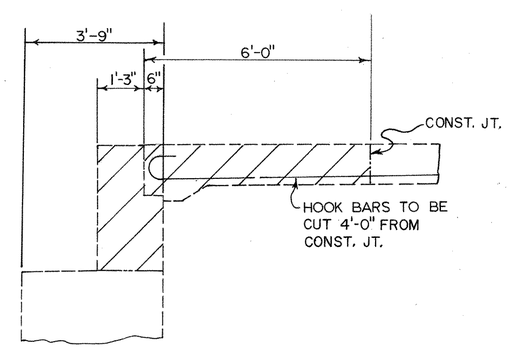

SECTION A-A

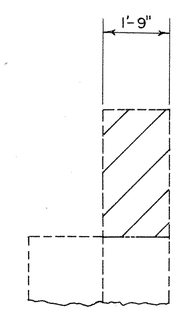

SECTION B-B

LIC-16-1594 L/R

ABUTMENT REMOVALS

MICROFILMED
NOV 5 1992

CALCULATED
CHECKED BY

CALCULATED BY RSD DATE 10-17-88
CHECKED BY GWC DATE 01-19-89

FHWA REGION	STATE	PROJECT	
5	OHIO		

107
123

LIC-37-15.61
LIC-16-14.26

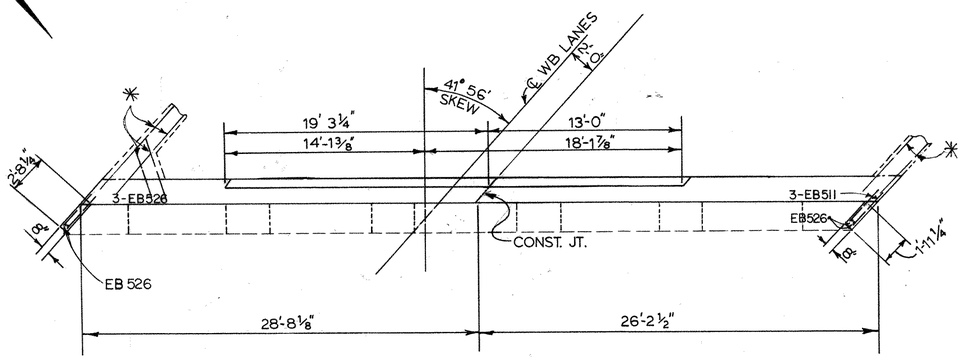

PLAN

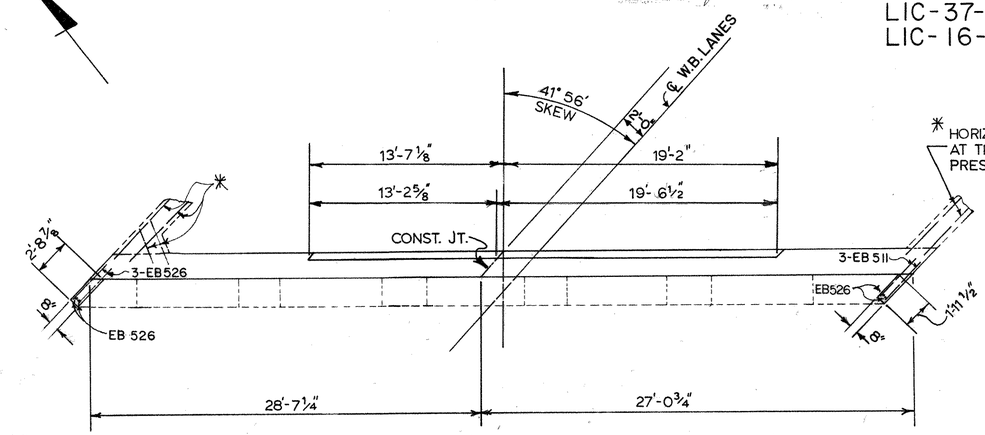

PLAN

* HORIZONTAL RE-STEEL ENCOUNTERED AT THE WINGWALLS SHALL BE PRESERVED IN PLACE.

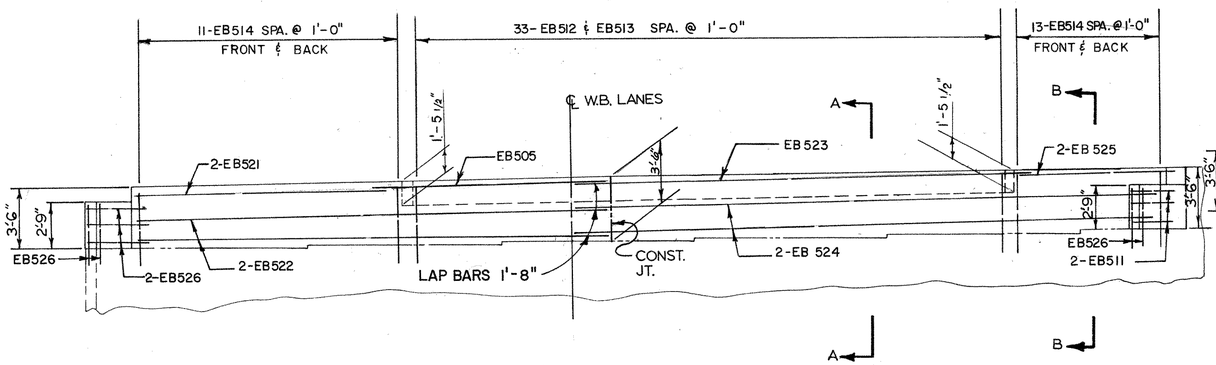

(ABUTMENT NO. 1)

ELEVATION

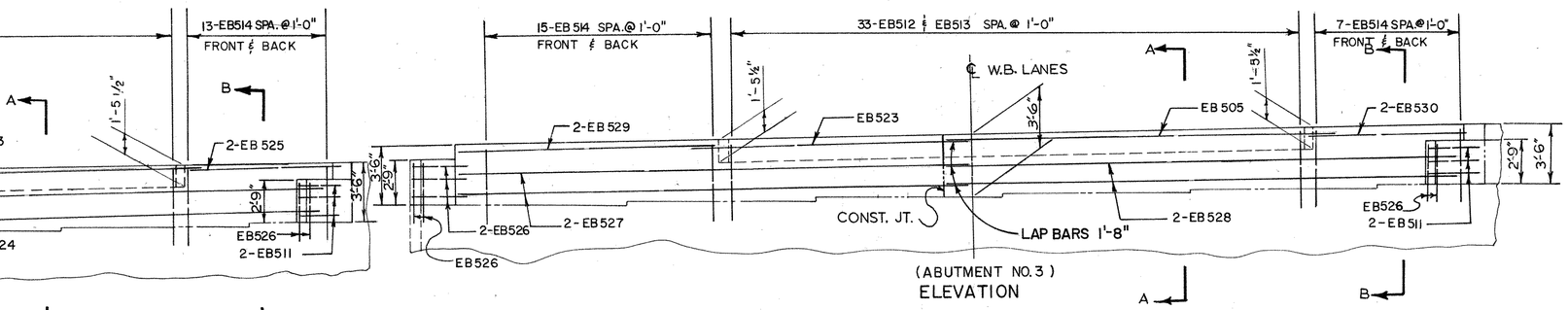

(ABUTMENT NO. 3)

ELEVATION

NOTE:
FOR RE-STEEL SCHEDULE
SEE SHEET 112 .

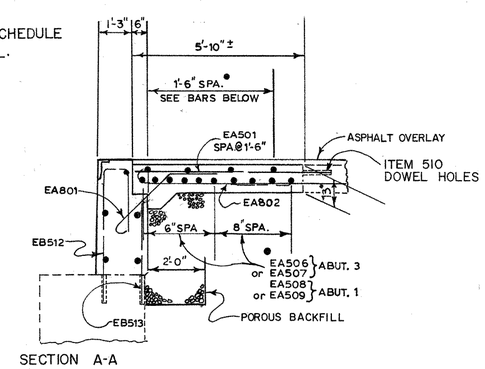

SECTION A-A

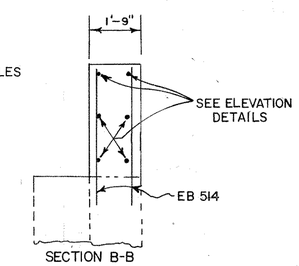

SECTION B-B

DESCRIPTION		QUANT.	UNIT
ITEM 510	DOWEL HOLES 12"	280	EACH
ITEM 511	CLASS C CONCRETE ABUTMENTS	24	CU.YD.
ITEM 518	POROUS BACKFILL	27	CU.YD.
ITEM 611	REINFORCED CONCRETE APPROACH SLAB (T=15"), AS PER PLAN	42	SQ.YD.

LIC-16-1594L

PROPOSED ABUTMENTS

MICROFILMED
NOV 5 1992

CALCULATED BY RSD DATE 10-17-88
CHECKED BY gwc DATE 01-19-89

FHWA REGION	STATE	PROJECT	
5	OHIO		

108/123

LIC-37-15.61
LIC-16-14.26

NOTE: * HORIZONTAL RESTEEL ENCOUNTERED IN THE WINGWALL SHALL BE PRESERVED IN PLACE (TYP.)

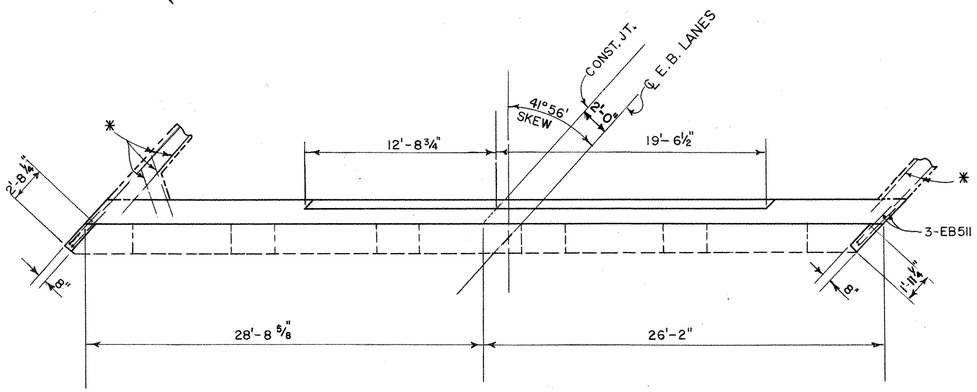

PLAN

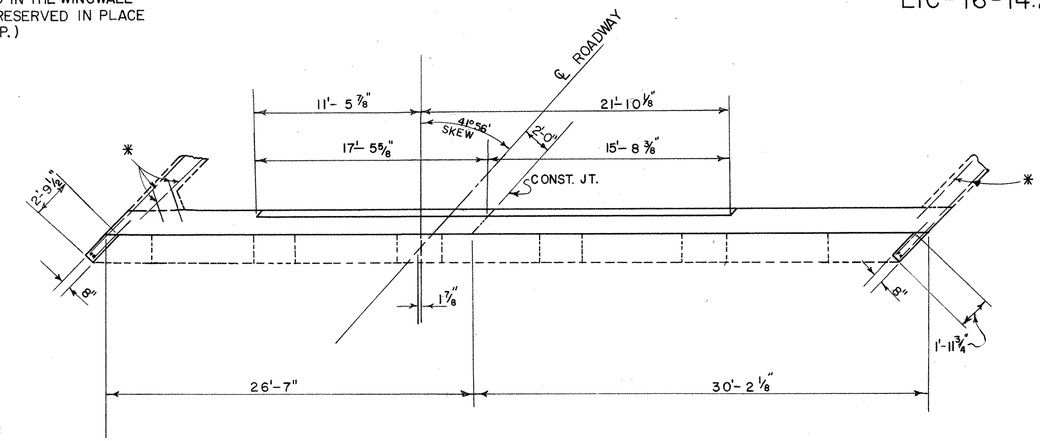

PLAN

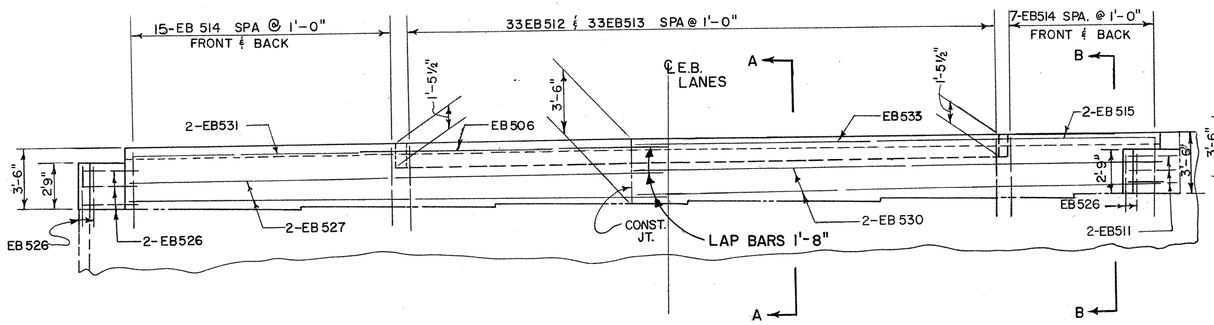

ELEVATION
ABUTMENT № 2

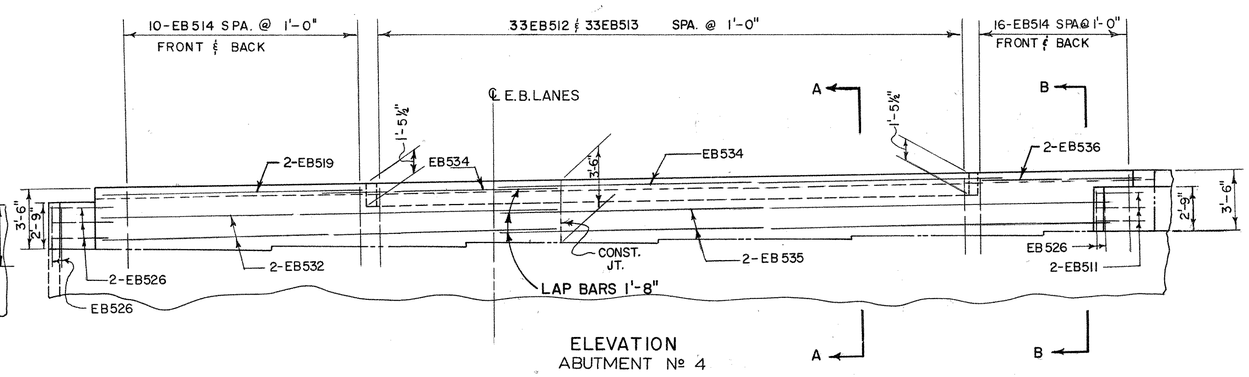

ELEVATION
ABUTMENT № 4

NOTE:
FOR RE-STEEL SCHEDULE
SEE SHEET 112.

DESCRIPTION		QUANT.	UNIT
ITEM 510	DOWEL HOLES 12"	280	EACH
ITEM 511	CLASS C CONCRETE, ABUTMENTS	24	CU.YD.
ITEM 518	POROUS BACKFILL	23	CU.YD.
ITEM 611	REINFORCED CONCRETE APPROACH SLAB (T=15"), AS PER PLAN	42	SQ.YD.

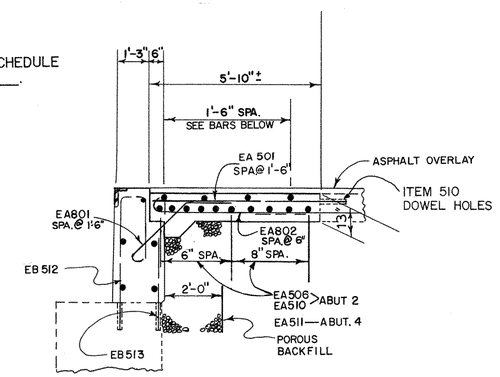

SECTION A-A

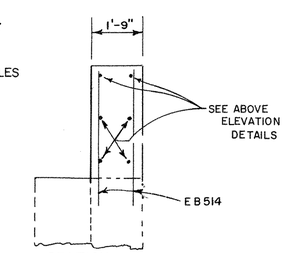

SECTION B-B

LIC-16-1594 R

PROPOSED ABUTMENTS

MICROFILMED
NOV 5 1992

CALCULATED BY RSD DATE 12-17-88
CHECKED BY [illegible] DATE 01-19-89

FHWA REGION	STATE	PROJECT	
5	OHIO		

109/123

LIC-37-15.61
LIC-16-14.26

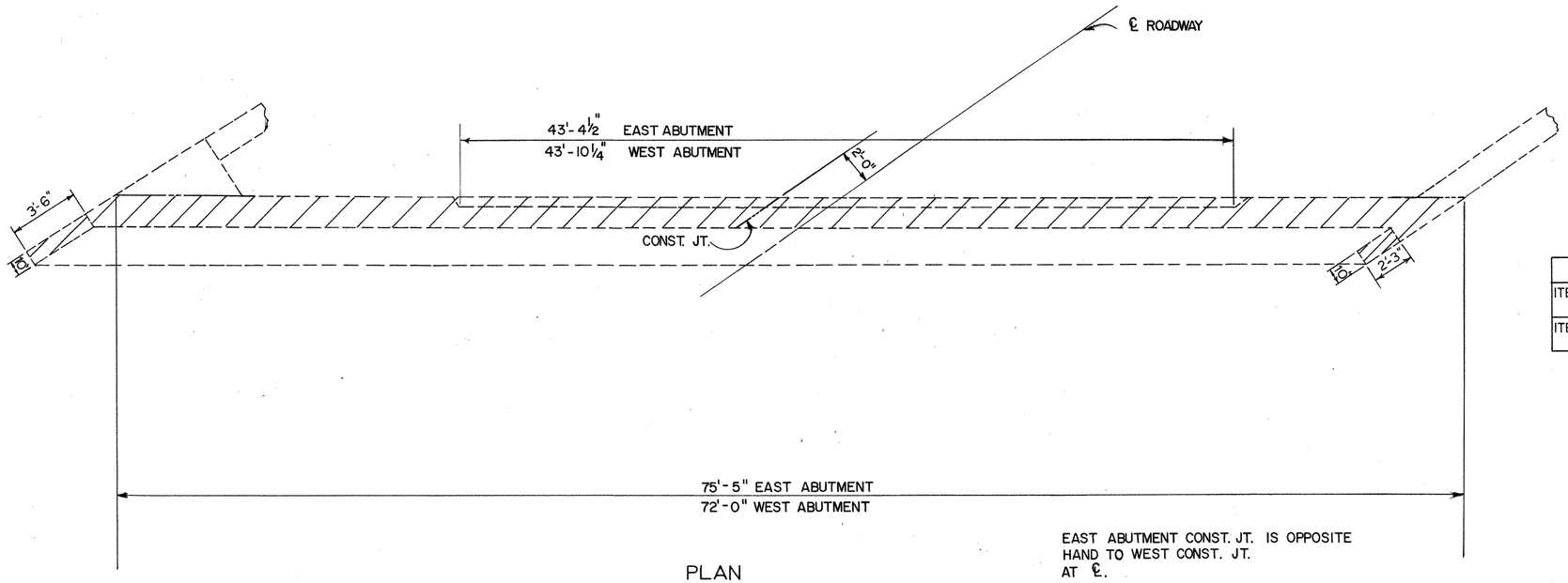

PLAN

EAST ABUTMENT CONST. JT. IS OPPOSITE HAND TO WEST CONST. JT. AT ℄.

DESCRIPTION		QUANT.	UNIT
ITEM 202	PORTIONS OF STRUCTURES REMOVED, SUBSTRUCTURE	36	CU. YD.
ITEM 202	PORTIONS OF APPROACH SLAB REMOVED	54	SQ. YD.

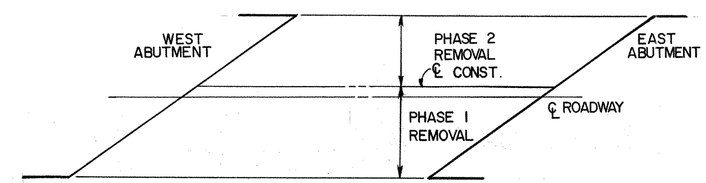

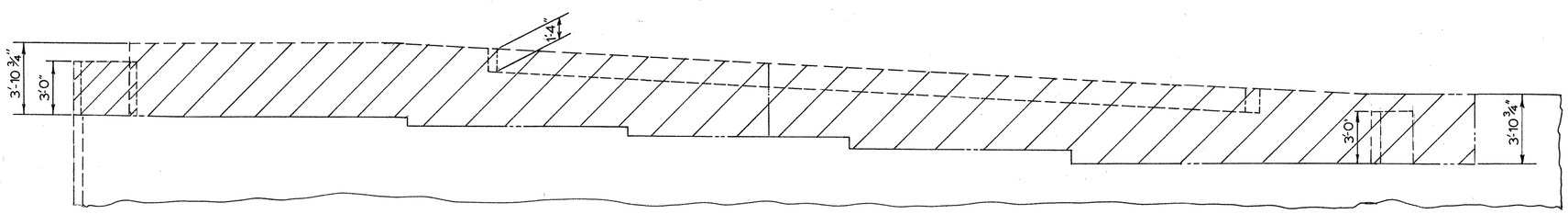

ELEVATION

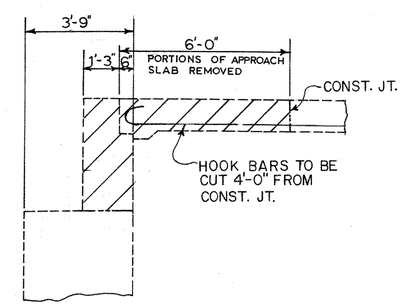

SECTION A-A

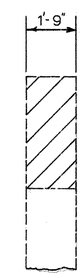

SECTION B-B

LIC-16-1773L

ABUTMENT REMOVALS

MICROFILMED
NOV 5 1982

CALCULATED BY RSD DATE 10-17-88
CHECKED BY gwa DATE 01-19-89

FHWA REGION	STATE	PROJECT	
5	OHIO		

LIC-37-15.61
LIC-16-14.26

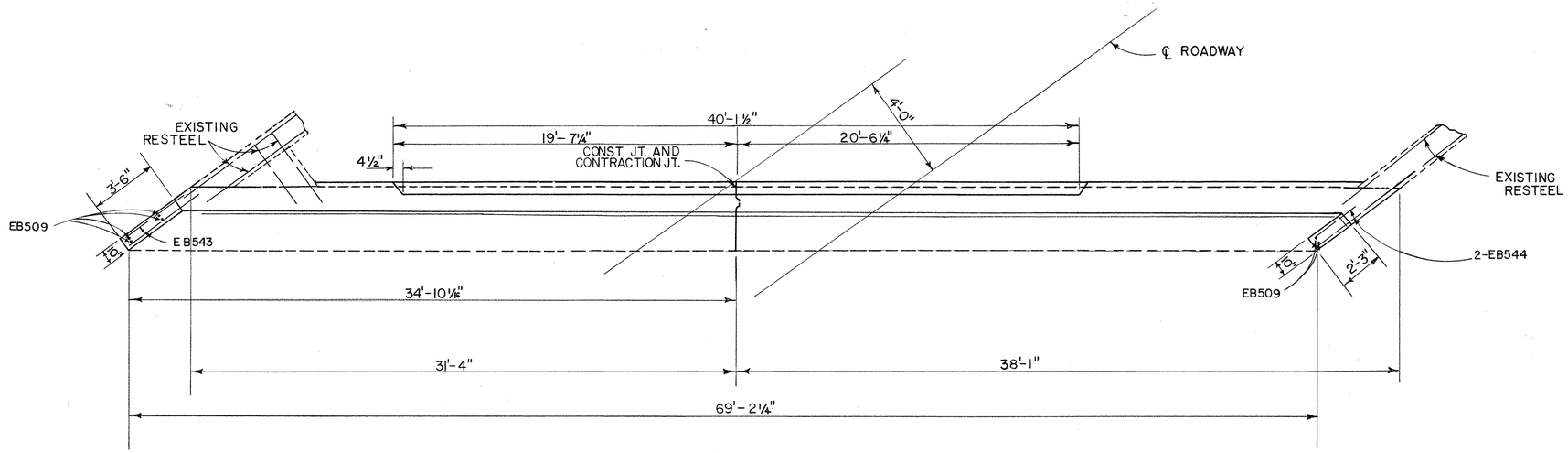

PLAN

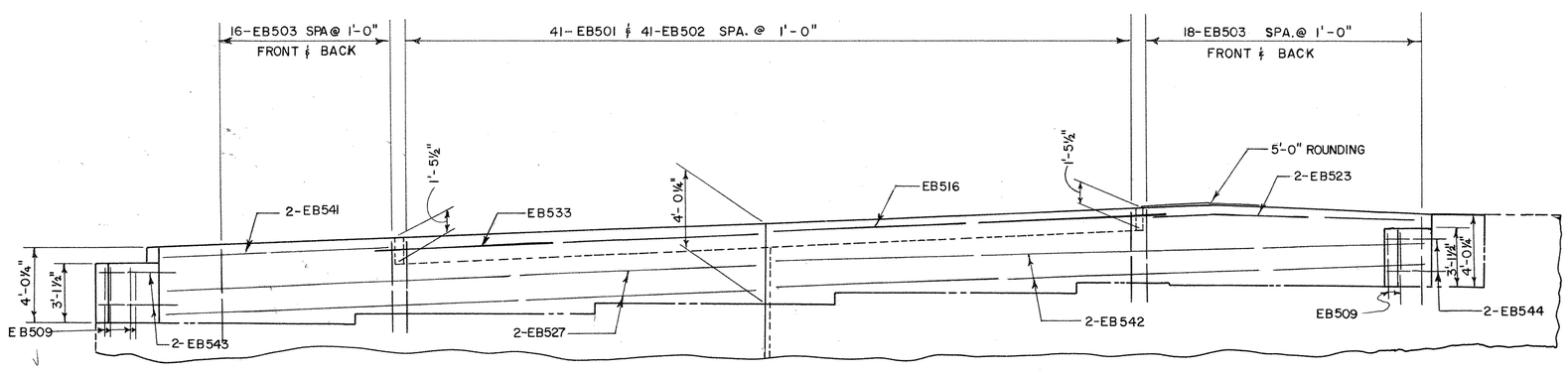

ELEVATION

REAR ABUTMENT

DESCRIPTION		QUANT.	UNIT
ITEM 510	DOWEL HOLES 12"	183	EACH
ITEM 511	CLASS C CONCRETE, ABUTMENTS	18	CU.YD.
ITEM 518	POROUS BACKFILL	23	CU.YD.
ITEM 611	REINFORCED CONCRETE APPROACH SLAB (T=15"), AS PER PLAN	26	SQ.YD.

NOTE:
FOR RE-STEEL SCHEDULE SEE SHEET 112.

FOR SECTION A-A & B-B
SEE SHEET 111.

LIC-16-1773L

PROPOSED ABUTMENT

MICROFILMED
NOV 5 1992

CALCULATED BY RSD DATE 10-17-88
CHECKED BY gwc DATE 01-19-89

FHWA REGION	STATE	PROJECT	
5	OHIO		

LIC-37-15.61
LIC-16-14.26

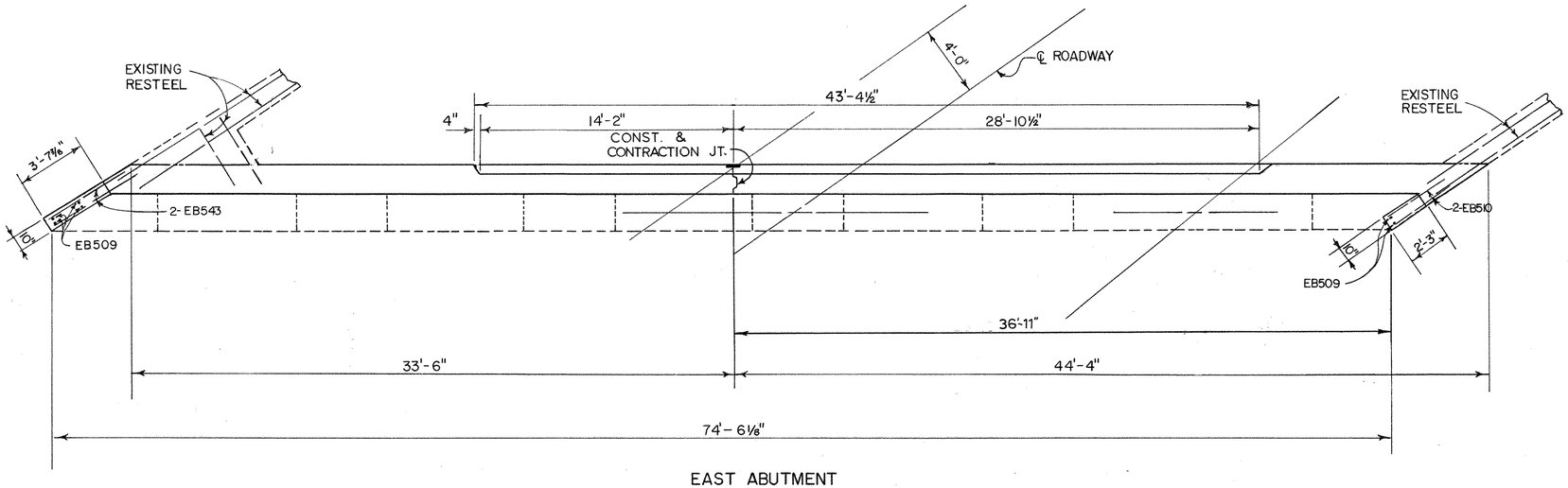

EAST ABUTMENT
PLAN

DESCRIPTION	QUANT.	UNIT
ITEM 510 DOWEL HOLES 12"	195	EACH
ITEM 511 CLASS C CONCRETE, ABUTMENTS	20	CU. YD.
ITEM 518 POROUS BACKFILL	26	CU. YD.
ITEM 611 REINFORCED CONCRETE APPROACH SLAB (T=15"), AS PER PLAN	28	SQ. YD.

NOTE:
FOR RE-STEEL SCHEDULE SEE SHEET 112.

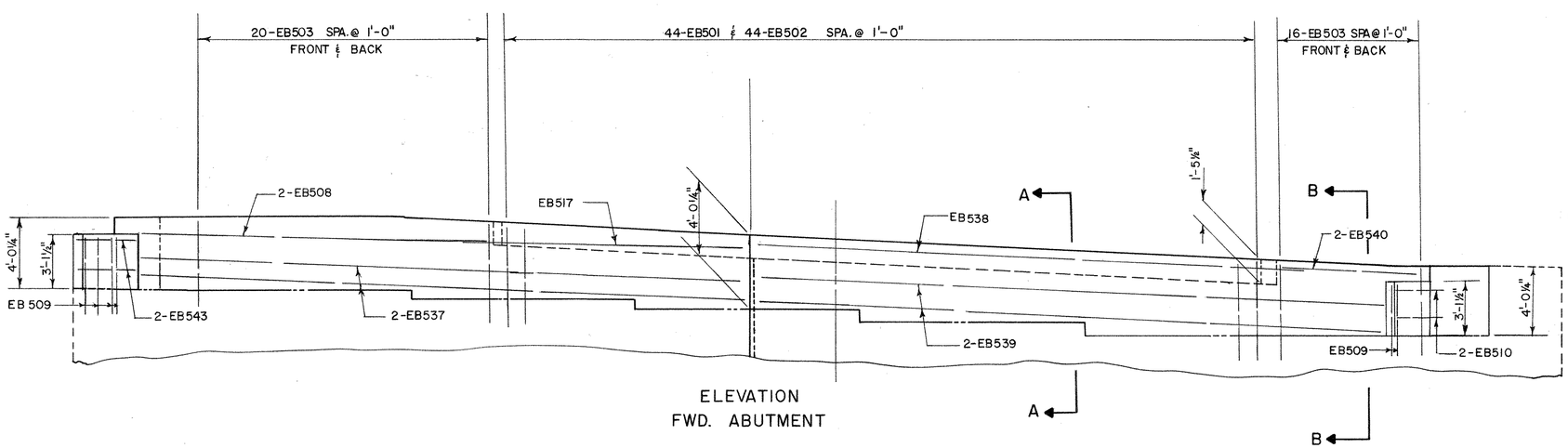

ELEVATION
FWD. ABUTMENT

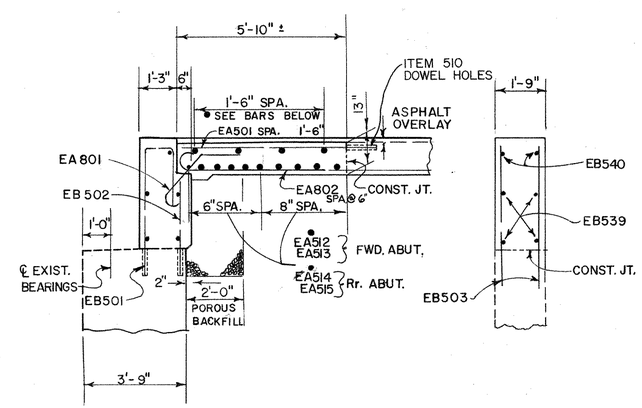

SECTION A-A

SECTION B-B

LIC-16-1773L

PROPOSED ABUTMENT

CALC. BY RSD DATE 10-17-88	LIC-37-15.61	OHIO	112
CHKD. BY DWM DATE 10-19-88	LIC-16-14.26	FHWA REGION 5	123

EPOXY COATED REINFORCING STEEL – ABUTMENTS

MICROFILMED
NOV 5 1992

LIC–16–1416L

MARK	No. REQ'D FWD.	No. REQ'D Rr.	LENGTH	SHAPE	WEIGHT FWD.	WEIGHT Rr.
EB501	25	25	8'–11"	BT.	233	233
EB502	25	25	3'–7"	ST.	93	93
EB503	28	28	4'–11"	ST.	144	144
EB504	4	4	6'–3"	ST.	26	26
EB505	4	4	20'–6"	ST.	86	86
EB506	1	1	15'–9"	ST.	16	16
EB507	1	1	15'–3"	ST.	16	16
EB508	4	4	19'–4"	ST.	81	81
EB509	4	4	4'–0"	ST.	17	17
EB510	6	6	2'–11"	ST.	18	18
EB511	6	6	2'–8"	ST.	17	17
EA501 *	18	18	6'–8"	ST.		
EA502 *	14	14	14'–6"	ST.		
EA503 *	14	14	12'–3"	ST.		
EA801	18	18	3'–7"	BT.	172	172
EA802	50	50	4'–0"	BT.	534	534
TOTALS	2 ABUTMENTS				1453	1453

LIC–16–1560L

MARK	No. REQ'D FWD.	No. REQ'D Rr.	LENGTH	SHAPE	WEIGHT FWD.	WEIGHT Rr.
EB510	4	4	2'–11"	ST.	12	12
EB511	6	6	2'–8"	ST.	17	17
EB512	25	25	8'–1"	BT.	211	211
EB513	25	25	3'–2"	ST.	83	83
EB514	18	18	4'–6"	ST.	84	84
EB515	2	2	6'–10"	ST.	14	14
EB516	4	4	21'–6"	ST.	90	90
EB517	1	1	14'–7"	ST.	15	15
EB518	1	1	11'–1"	ST.	12	12
EB519	2	2	10'–8"	ST.	23	23
EB520	4	4	22'–6"	ST.	94	94
EA501 *	17	17	6'–8"	ST.		
EA504 *	14	14	13'–2"	ST.		
EA505 *	14	14	12'–2"	ST.		
EA801	17	17	3'–7"	BT.	163	163
EA802	50	50	4'–0"	BT.	534	534
TOTALS					1352	1352

LIC–16–1560R

MARK	No. REQ'D FWD.	No. REQ'D Rr.	LENGTH	SHAPE	WEIGHT FWD.	WEIGHT Rr.
EB510	4	4	2'–11"	ST.	12	12
EB511	6	6	2'–8"	ST.	17	17
EB512	25	25	8'–1"	BT.	211	211
EB513	25	25	3'–2"	ST.	83	83
EB514	18	18	4'–6"	ST.	84	84
EB515	2	2	6'–10"	ST.	14	14
EB516	4	4	21'–6"	ST.	90	90
EB517	1	1	14'–7"	ST.	15	15
EB518	1	1	11'–1"	ST.	12	12
EB519	2	2	10'–8"	ST.	23	23
EB520	4	4	22'–6"	ST.	94	94
EA501 *	17	17	6'–8"	ST.		
EA504 *	14	14	13'–2"	ST.		
EA505 *	14	14	12'–2"	ST.		
EA801	17	17	3'–7"	BT.	163	163
EA802	50	50	4'–0"	BT.	534	534
TOTALS					1352	1352

LIC–16–1594L

MARK	No. REQ'D FWD.	No. REQ'D Rr.	LENGTH	SHAPE	WEIGHT FWD.	WEIGHT Rr.
EB505	1	1	20'–6"	ST.	21	21
EB511	6	6	2'–8"	ST.	17	17
EB512	33	33	8'–1"	BT.	267	267
EB513	33	33	3'–3"	ST.	112	112
EB514	22	24	4'–6"	ST.	103	113
EB521	–	2	8'–0"	ST.	–	17
EB522	–	4	28'–2"	ST.	–	113
EB523	1	1	16'–9"	ST.	17	17
EB524	–	4	28'–5"	ST.	–	119
EB525	–	2	12'–6"	ST.	–	26
EB526	10	10	3'–6"	ST.	37	37
EB527	4	–	30'–10"	ST.	129	–
EB528	4	–	26'–6"	ST.	111	–
EB529	2	–	16'–3"	ST.	34	–
EB530	2	–	25'–6"	ST.	53	–
EA501 *	23	23	6'–8"	ST.		
EA506 *	14	14	19'–4"	ST.		
EA507 *	14	14	16'–0"	ST.		
EA508 *	14	14	18'–10"	ST.		
EA509 *	14	14	15'–4"	ST.		
EA801	23	23	3'–7"	BT.	220	220
EA802	66	66	4'–0"	BT.	705	705
TOTALS					1826	1784

LIC–16–1594R

MARK	No. REQ'D FWD.	No. REQ'D Rr.	LENGTH	SHAPE	WEIGHT FWD.	WEIGHT Rr.
EB506	–	1	15'–9"	ST.	–	16
EB511	6	6	2'–8"	ST.	17	17
EB512	33	33	8'–1"	BT.	278	278
EB513	33	33	3'–3"	ST.	112	112
EB514	26	22	4'–6"	ST.	122	103
EB515	–	2	6'–10"	ST.	–	14
EB519	2	–	10'–8"	ST.	11	–
EB526	10	10	3'–6"	ST.	37	37
EB527	–	4	30'–10"	ST.	–	129
EB530	–	4	25'–6"	ST.	–	106
EB531	–	2	16'–0"	ST.	–	33
EB532	4	–	26'–2"	ST.	109	–
EB533	–	1	20'–2"	ST.	–	21
EB534	2	–	18'–2"	ST.	38	–
EB535	4	–	32'–6"	ST.	136	–
EB536	2	–	14'–4"	ST.	30	–
EA501 *	22	22	6'–8"	ST.		
EA506 *	14	–	19'–4"	ST.		
EA510 *	14	–	14'–6"	ST.		
EA511 *	–	28	17'–2"	ST.		
EA801	22	22	3'–7"	BT.	210	210
EA802	65	65	4'–0"	BT.	694	694
TOTALS					1794	1770

LIC–16–1773L

MARK	No. REQ'D FWD.	No. REQ'D Rr.	LENGTH	SHAPE	WEIGHT FWD.	WEIGHT Rr.
EB508	2	–	19'–4"	ST.	40	–
EB509	6	6	4'–0"	ST.	25	25
EB510	4	–	2'–11"	ST.	12	–
EB516	–	1	21'–6"	ST.	–	22
EB517	1	–	14'–7"	ST.	15	–
EB523	–	2	16'–9"	ST.	–	35
EB527	–	4	30'–10"	ST.	–	129
EB533	–	1	20'–2"	ST.	–	21
EB537	4	–	33'–0"	ST.	138	–
EB538	1	–	29'–8"	ST.	31	–
EB539	4	–	44'–0"	ST.	184	–
EB540	2	–	15'–0"	ST.	31	–
EB541	–	2	11'–6"	ST.	–	24
EB542	–	4	37'–0"	ST.	–	154
EB543	4	4	4"–3"	ST.	18	18
EB544	–	4	3'–0"	ST.	–	13
EA501 *	29	27	6'–8"	ST.		
EA512 *	14	–	20'–10"	ST.		
EA513 *	14	–	28'–6"	ST.		
EA514 *	–	14	26'–2"	ST.		
EA515 *	–	14	20'–2"	ST.		
EA801	29	27	3'–7"	BT.	277	258
EA802	87	80	4'–0"	BT.	929	854
SUB TOTALS					1700	1553

LIC-16-1773 L (CONTINUED)

MARK	No. REQ'D. FWD.	No. REQ'D. Rr.	LENGTH	SHAPE	WEIGHT FWD.	WEIGHT Rr.
EB501	44	41	8'-11"	BT.	409	381
EB502	44	41	3'-7"	ST.	164	153
EB503	36	34	4'-11"	ST.	185	174
TOTALS					2458	2261

* EA501 THRU EA515 ARE FOR THE APPROACH SLABS. THE LENGTHS GIVEN ARE FOR ESTIMATED PURPOSES TO ALLOW FOR HALF WIDTH CONSTR. THE CONTRACTOR SHALL VERIFY LENGTHS PRIOR TO START OF CONSTRUCTION AS DIRECTED BY THE ENGINEER. PAYMENT FOR APPROACH SLAB RE-STEEL SHALL BE INCLUDED IN ITEM 611 REINFORCED CONCRETE APPROACH SLAB (T=15"), AS PER PLAN.

NOTE: REPLACEMENT BAR PREFIX "E" INDICATES EPOXY COATING.

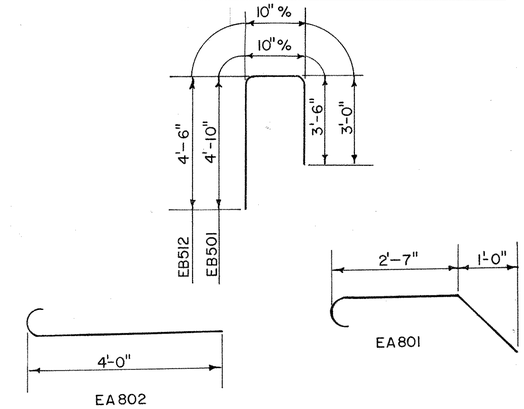

BENDING DIAGRAMS

MICROFILMED
NOV 5 1992

CALC. BY ESD DATE 10-23-92	LIC-37-15.61	OHIO	113
CHKD. BY DATE	LIC-16-14.26	FHWA REGION 5	123

EXISTING END CROSSFRAME ANGLES AND GUSSET PLATES SHALL BE REMOVED AND RESET OR REPLACED TO ALLOW NEW EXPANSION JOINT ARMOR TO BE INSTALLED AS DEEMED NECESSARY BY THE ENGINEER. PLACEMENT OF CROSSFRAMES AND GUSSET PLATES SHALL BE AS PER STD. DRWG.-EXJ-4-87 (NEW MEMBERS) AND SD-1-69 (EXISTING MEMBERS).
THE ESTIMATED AMOUNTS OF 4106 POUNDS OF ITEM 513, STRUCTURAL STEEL AND 9544 POUNDS OF ITEM 513, STRUCTURAL STEEL REMOVED FOR RE-USE HAVE BEEN INCLUDED IN THE GENERAL SUMMARY. ALL STEEL (NEW AND EXISTING) SHALL BE FIELD PAINTED ACCORDING TO 514.05. FINISH PAINT SHALL BE 708.08 (GRAY).
ALL LABOR, MATERIALS, EQUIPMENT AND INCIDENTALS NECESSARY TO COMPLETE THIS WORK SHALL BE INCLUDED WITH ITEM 513, STRUCTURAL STEEL REMOVED FOR RE-USE OR ITEM 513, STRUCTURAL STEEL FOR PAYMENT.

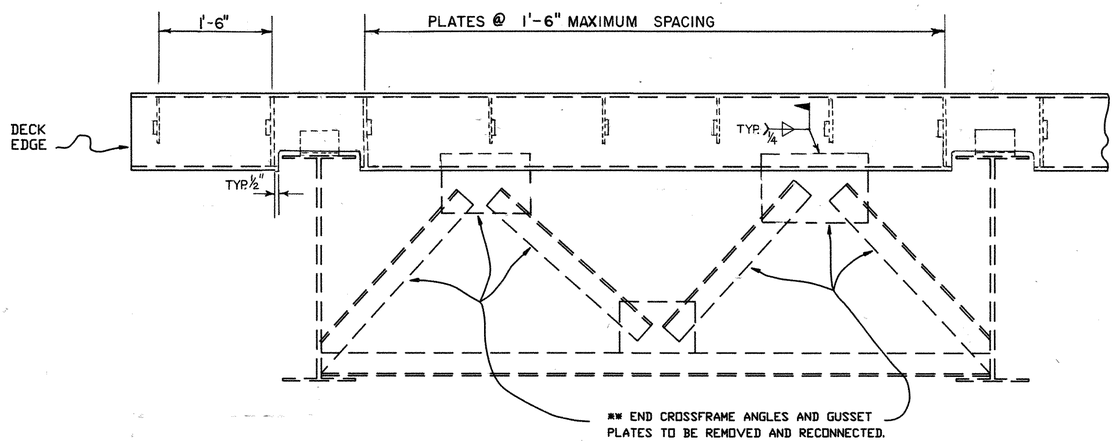

END CROSSFRAME AND STRUCTURAL EXPANSION JOINT DETAIL

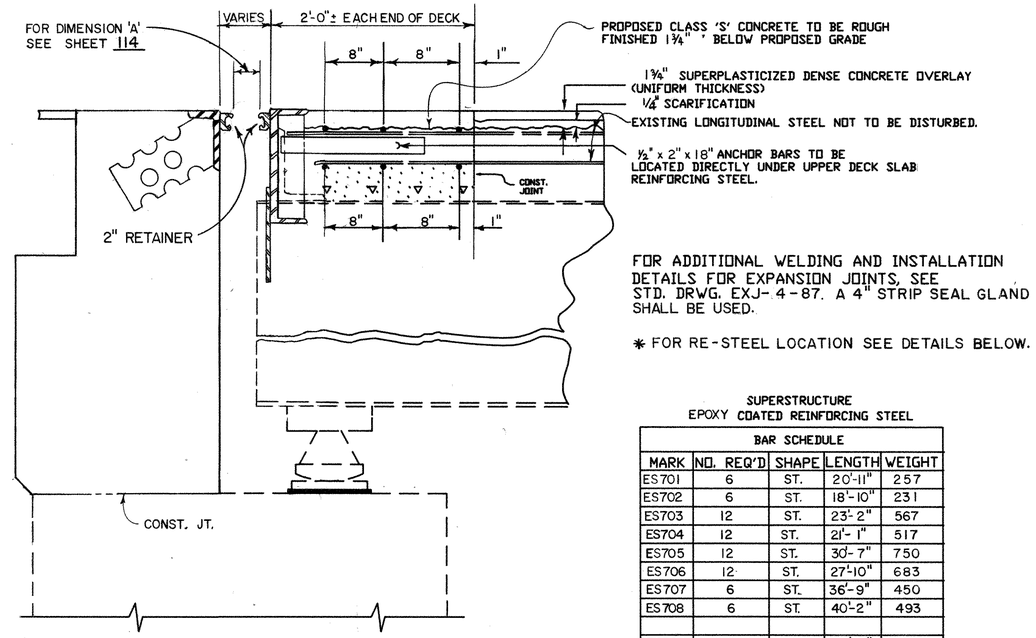

A-A
SECTION ON ℄ OF ROADWAY AT ABUTMENT
STRIP SEAL EXPANSION JOINTS

FOR ADDITIONAL WELDING AND INSTALLATION DETAILS FOR EXPANSION JOINTS, SEE STD. DRWG. EXJ-4-87. A 4" STRIP SEAL GLAND SHALL BE USED.

* FOR RE-STEEL LOCATION SEE DETAILS BELOW.

SUPERSTRUCTURE
EPOXY COATED REINFORCING STEEL

BAR SCHEDULE

MARK	NO. REQ'D	SHAPE	LENGTH	WEIGHT
ES701	6	ST.	20'-11"	257
ES702	6	ST.	18'-10"	231
ES703	12	ST.	23'-2"	567
ES704	12	ST.	21'-1"	517
ES705	12	ST.	30'-7"	750
ES706	12	ST.	27'-10"	683
ES707	6	ST.	36'-9"	450
ES708	6	ST.	40'-2"	493
ES801	6	ST.	20'-11"	335
ES802	6	ST.	18'-10"	302
ES803	12	ST.	23'-2"	742
ES804	12	ST.	21'-1"	675
ES805	12	ST.	30'-7"	980
ES806	12	ST.	27'-10"	892
ES807	6	ST.	36'-9"	589
ES808	6	ST.	40'-2"	643
TOTALS				9106

DESCRIPTION	BR. NO. LIC 16-1416L	BR. NO. LIC 16-1560L	BR. NO. LIC 16-1560R	BR. NO. LIC 16-1594L	BR. NO. LIC 16-1594R	BR. NO. LIC 16-1773L	UNIT
ITEM 511-CLASS S CONCRETE, SUPERSTRUCTURE	5	5	5	6	6	8	CU.YD.
ITEM 509-EPOXY COATED REINFORCING STEEL GRADE 60	1125	1251	1251	1652	1652	2175	POUND
ITEM 202-PORTIONS OF STRUCTURES REMOVED, SUPERSTRUCTURE	5	5	5	6	6	8	CU.YD.
ITEM 513-STRUCTURAL STEEL	380	475	475	846	846	1084	POUND
ITEM 513-STRUCTURAL STEEL REMOVED FOR RE-USE	1140	1426	1426	1692	1692	2168	POUND

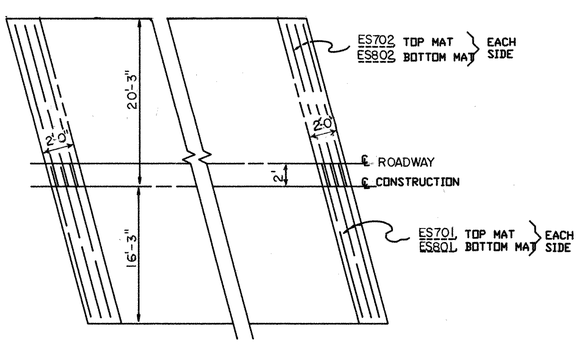

LIC-16-1416L

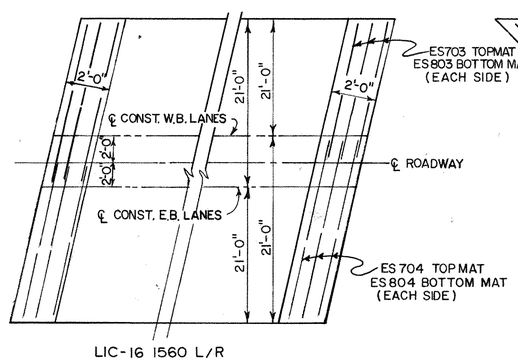

LIC-16 1560 L/R

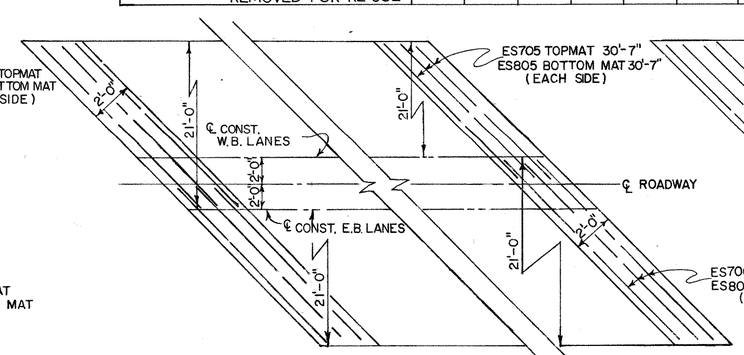

LIC-16-1594 L/R

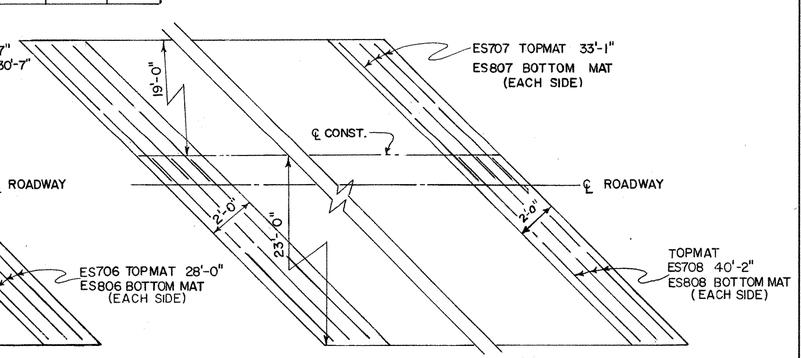

LIC-16-1773L

SUPERSTRUCTURE DETAILS

MICROFILMED
NOV 5 1992

CALC. BY	LIC-37-15.61	OHIO	114
DATE 10-17-86	LIC-16-14.26	FHWA REGION 5	123
CHKD. BY			
DATE 10-19-87			

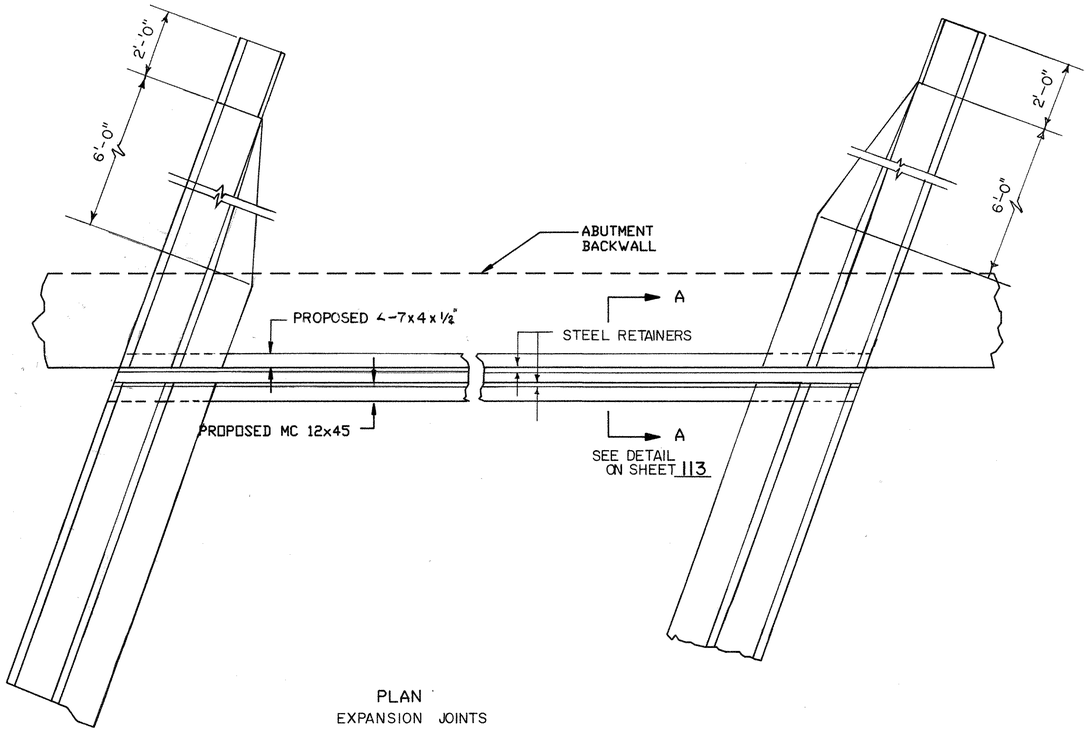

PLAN
EXPANSION JOINTS

BRIDGE NUMBER	ANGLE LT. RR. ABUT.	ANGLE RT. RR. ABUT.	ANGLE LT.FWD. ABUT.	ANGLE RT.FWD. ABUT.	516 EXPANSION JOINT PAY LENGTH	202 EXPANSION JOINTS REMOVED
LIC-16-1416L	18°20'20"	18°20'20"	18°20'20"	18°20'20"	77'-0"	73'-0"
LIC-16-1560L	12° 0'	12° 0'	12° 0'	12° 0'	86'-0"	82'-0"
LIC-16-1560R	12° 0'	12° 0'	12° 0'	12° 0'	86'-0"	82'-0"
LIC-16-1594L	41° 56'	41° 56'	41°-56'	41° 56'	113'-0"	108'-0"
LIC-16-1594R	41° 56'	41° 56'	41°-56'	41° 56'	113 - 0"	108'-0"
LIC-16-1773L	55° 26' 26"	55° 26' 26"	55° 26' 26"	55° 26' 26"	148'-0"	141'-0"

ESTIMATED LENGTH: CONTRACTOR SHALL VERIFY ACTUAL LENGTH NEEDED
LEGEND: RR - REAR
FWD - FORWARD

AMBIENT TEMP. F°	DIMENSION 'A'											
	LIC-16-1416L		LIC-16-1560L		LIC-16-1560R		LIC-16-1594L		LIC-16-1594R		LIC-16-1773L	
	Rr.	FWD.	Rr.	FWD.	Rr.	FWD.	Rr.	FWD.	Rr.	FWD.	Rr.	FWD.
90	1 3/4"	1 11/16"	1 7/8"	1 3/4"	1 7/8"	1 3/4"	1 11/16"	1 7/8"	1 11/16"	1 7/8"	1 11/16"	1 7/8"
80	1 13/16"	1 13/16"	1 15/16"	1 13/16"	1 15/16"	1 13/16"	1 13/16"	1 15/16"	1 13/16"	1 15/16"	1 13/16"	1 15/16"
70	1 15/16"	1 7/8"	1 15/16"	1 15/16"	1 15/16"	1 15/16"	1 15/16"	1 15/16"	1 15/16"	1 15/16"	1 15/16"	1 15/16"
60	2"	2"	2"	2"	2"	2"	2"	2"	2"	2"	2"	2"
50	2 1/16"	2 1/8"	2 1/16"	2 1/16"	2 1/16"	2 1/16"	2 1/16"	2 1/16"	2 1/16"	2 1/16"	2 1/16"	2 1/16"
40	2 3/16"	2 3/16"	2 1/16"	2 3/16"	2 1/16"	2 3/16"	2 3/16"	2 1/16"	2 3/16"	2 1/16"	2 3/16"	2 1/16"
30	2 1/4"	2 5/16"	2 1/8"	2 1/4"	2 1/8"	2 1/4"	2 5/16"	2 1/8"	2 5/16"	2 1/8"	2 5/16"	2 1/8"

EXPANSION JOINT DETAILS

M070174E (C) 7/13/88

MICROFILMED
NOV 5 1992

CALCULATED BY RSD DATE 10-17-88
CHECKED BY JWC DATE 01-19-89

FHWA REGION	STATE	PROJECT	
5	OHIO		

115
123

LIC-37-15.61
LIC-16-14.26

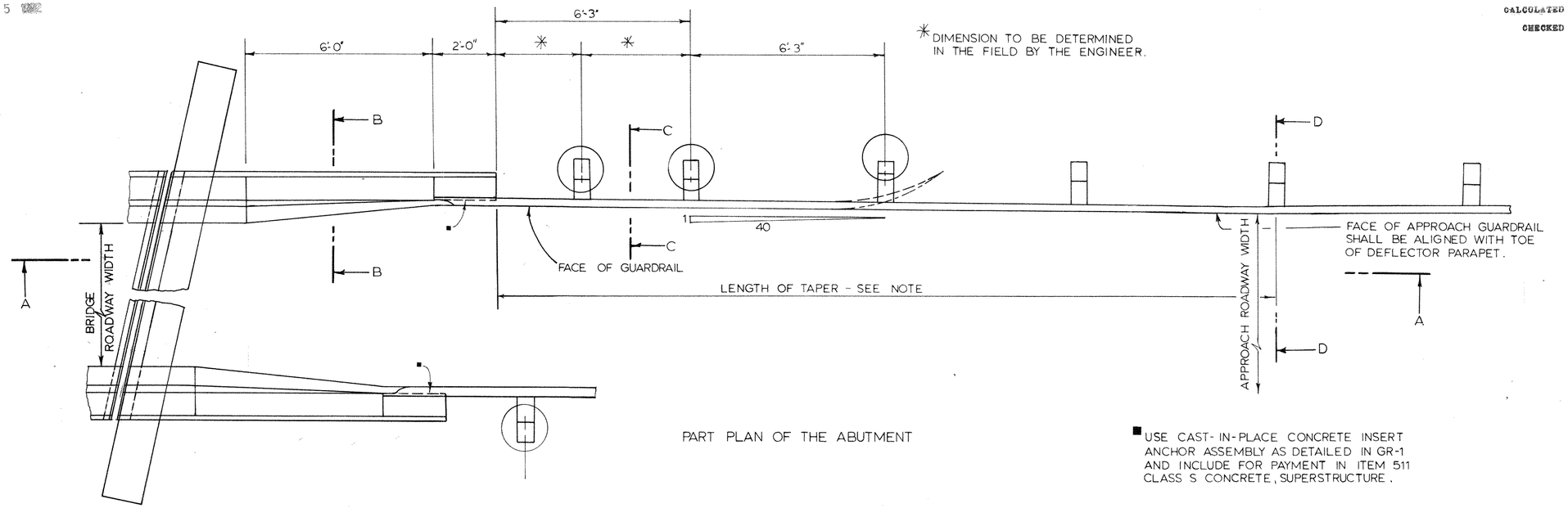

PART PLAN OF THE ABUTMENT

■ USE CAST-IN-PLACE CONCRETE INSERT ANCHOR ASSEMBLY AS DETAILED IN GR-1 AND INCLUDE FOR PAYMENT IN ITEM 511 CLASS S CONCRETE, SUPERSTRUCTURE.

REFERENCE:
FOR ADDITIONAL DETAILS AND DETAILS NOT SHOWN, SEE STANDARD DRAWINGS BR-1, GR-1, GR-2B, GR-3

NOTE:
ALL HOLES IN THE FIRST APPROACH GUARDRAIL PANEL ADJACENT TO THE BRIDGE SHALL BE SLOTTED ¾" × 2½" AND BOLTS SHALL BE TIGHTENED AS SPECIFIED FOR EXPANSION JOINTS AS PER 606.05.

TAPER:
THE 40:1 TAPER SHOWN IS DESIRABLE. HOWEVER, ANY TAPER 25:1 OR FLATTER IS ACCEPTABLE. THE LENGTH OF TAPER WILL VARY DEPENDING ON THE RATE OF TAPER AND THE ALIGNMENT OF THE APPROACH GUARDRAIL WITH RESPECT TO THE TOE OF THE PARAPET.

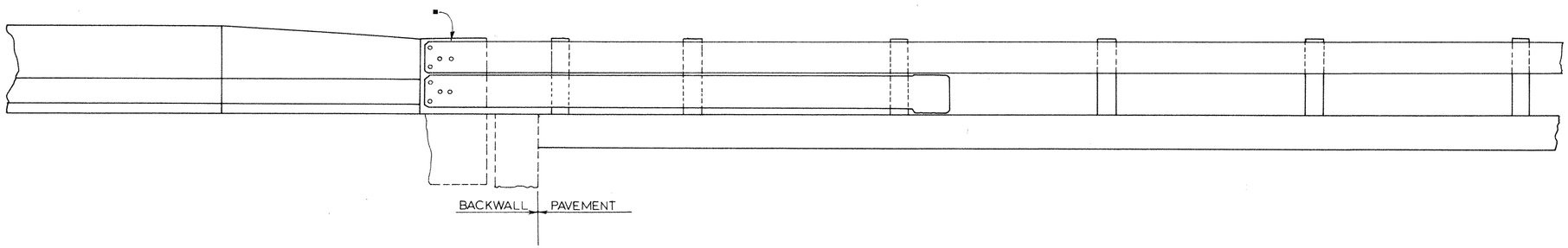

SECTION A-A

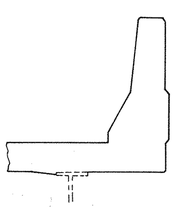

SECTION B-B

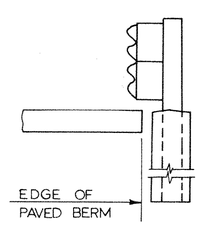

SECTION C-C

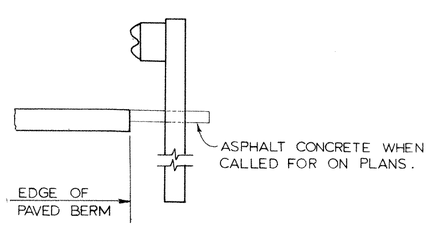

SECTION D-D

GUARDRAIL TRANSITION

LIC-37-15.61
LIC-16-14.26

115-A
123

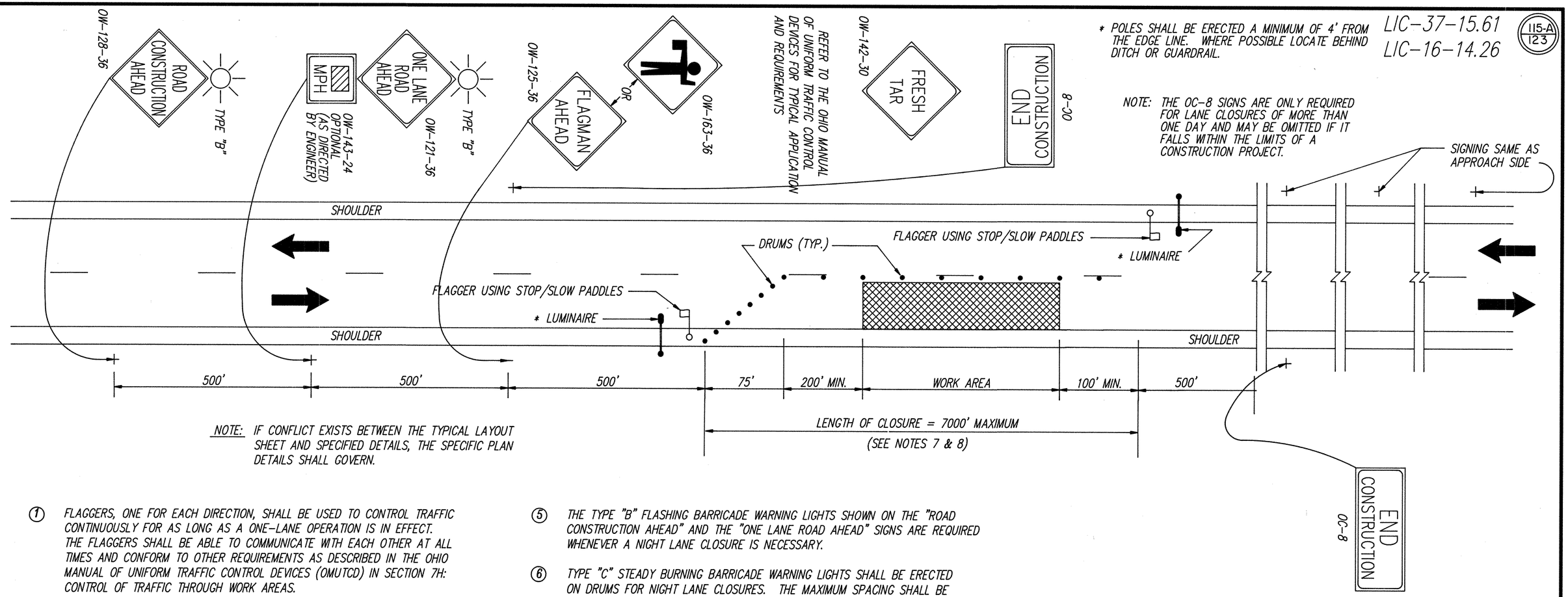

NOTE: IF CONFLICT EXISTS BETWEEN THE TYPICAL LAYOUT SHEET AND SPECIFIED DETAILS, THE SPECIFIC PLAN DETAILS SHALL GOVERN.

1. FLAGGERS, ONE FOR EACH DIRECTION, SHALL BE USED TO CONTROL TRAFFIC CONTINUOUSLY FOR AS LONG AS A ONE-LANE OPERATION IS IN EFFECT. THE FLAGGERS SHALL BE ABLE TO COMMUNICATE WITH EACH OTHER AT ALL TIMES AND CONFORM TO OTHER REQUIREMENTS AS DESCRIBED IN THE OHIO MANUAL OF UNIFORM TRAFFIC CONTROL DEVICES (OMUTCD) IN SECTION 7H: CONTROL OF TRAFFIC THROUGH WORK AREAS.

2. DRUMS SHALL BE SPACED AT 50' CENTER TO CENTER ALONG THE CLOSURE. DRUMS ON THE ADVANCE TAPER SHALL BE SPACED AT 10' CENTER TO CENTER. CONES HAVING A MINIMUM HEIGHT OF 28" MAY BE SUBSTITUTED FOR DRUMS FOR DAYTIME LANE CLOSURES. PROVISIONS SHALL BE MADE TO STABILIZE THE CONES TO PREVENT THEM FROM BLOWING OVER.

3. ADEQUATE AREA ILLUMINATION TO CLEARLY IDENTIFY THE FLAGGER STATION AT NIGHT SHALL BE PROVIDED BY USING 150 WATT MINIMUM HIGH PRESSURE SODIUM LUMINAIRES OR 250 WATT MINIMUM MERCURY VAPOR LUMINAIRES. THE LUMINAIRES SHALL BE LOCATED ADJACENT TO THE FLAGGER STATION FOR EACH DIRECTION OF TRAFFIC AS SHOWN ABOVE. THE MOUNTING HEIGHT FOR THE LUMINAIRES SHALL BE A MINIMUM OF 27 FEET ABOVE THE PAVEMENT AND MOUNTED ON A SUPPORT OF ADEQUATE STRENGTH TO PROVIDE A SATISFACTORY INSTALLATION. THE OVERHEAD CONDUCTOR CLEARANCE SHALL BE A MINIMUM OF 15 FEET ABOVE THE PAVEMENT.

   THE LUMINAIRE ARMS SHALL BE OF SUFFICIENT LENGTH TO EXTEND TO THE EDGE OF THE PAVEMENT.

4. THE LOCATION OF THE ADVANCE WARNING SIGNS SHOULD BE ADJUSTED TO PROVIDE FOR ADEQUATE SIGHT DISTANCE FOR THE EXISTING VERTICAL AND HORIZONTAL ROADWAY ALIGNMENT. THE DISTANCES SHOWN ARE MINIMUMS.

5. THE TYPE "B" FLASHING BARRICADE WARNING LIGHTS SHOWN ON THE "ROAD CONSTRUCTION AHEAD" AND THE "ONE LANE ROAD AHEAD" SIGNS ARE REQUIRED WHENEVER A NIGHT LANE CLOSURE IS NECESSARY.

6. TYPE "C" STEADY BURNING BARRICADE WARNING LIGHTS SHALL BE ERECTED ON DRUMS FOR NIGHT LANE CLOSURES. THE MAXIMUM SPACING SHALL BE IDENTICAL TO THE CHANNELIZING DEVICE SPACING REQUIREMENTS DESCRIBED IN NOTE 2.

7. WITHIN THE LENGTH OF CLOSURE, PROVISIONS SHALL BE MADE TO CONTROL TRAFFIC ENTERING FROM INTERSECTING STREETS AND MAJOR DRIVES AS NECESSARY TO PREVENT WRONG WAY MOVEMENTS AND TO KEEP VEHICLES OFF OF NEW PAVEMENT NOT READY FOR TRAFFIC.

8. WHEN THE AMBIENT TEMPERATURE EXCEEDS 80 DEGREES F., THE ENGINEER MAY INCREASE THE LENGTH OF CLOSURE TO ALLOW FOR SUFFICIENT COOLING OF THE NEW PAVEMENT.
   THE ENGINEER MAY SHORTEN THE MAXIMUM ALLOWABLE LENGTH OF CLOSURE TO RELIEVE EXCESSIVE TRAFFIC BACKUPS.
   ALL TRAFFIC CONTROL SIGNS, CHANNELIZING DEVICES, THE FLAGGER SHALL BE MOVED FORWARD BEFORE THE CLOSURE REACHES THE MAXIMUM ALLOWABLE LENGTH. ONLY ONE SIDE OF THE ROAD SHALL BE CLOSED AT ANY ONE TIME.

9. PAYMENT FOR ALL OF THE ABOVE, UNLESS ITEMIZED SEPARATELY, SHALL BE INCLUDED IN "ITEM 614 – MAINTAINING TRAFFIC".

STATE OF OHIO
DEPARTMENT OF TRANSPORTATION
DISTRICT FIVE

FLAGGER CLOSING ONE LANE OF A TWO LANE HIGHWAY

PAVING OPERATIONS

REV.	DRAWN	DATE 12-82
6-87		STANDARD DRAWING D3-03A

LIC-37-15.61
LIC-16-14.26

CALC. BY DW
DATE 1-3-87
CHECK. BY HWC
DATE 1-18-89

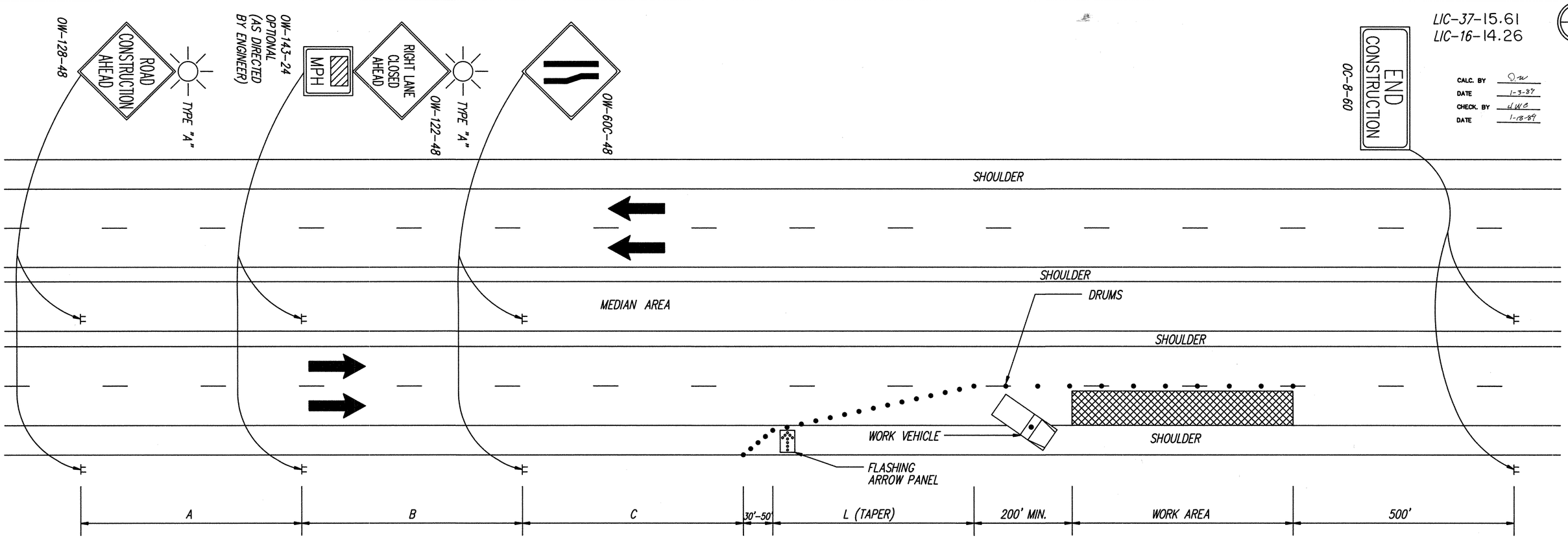

1. THE TAPER LENGTH (L) SHALL BE IN ACCORDANCE WITH SECTION 7F-17 OF THE OMUTCD. THE LOCATION OF THE TRANSITION TAPER AND LOCATION OF THE ADVANCE WARNING SIGNS SHOULD BE ADJUSTED TO PROVIDE FOR ADEQUATE SIGHT DISTANCE FOR THE EXISTING VERTICAL AND HORIZONTAL ROADWAY ALIGNMENT. IN ORDER TO DETERMINE THE MINIMUM NUMBER OF CHANNELIZING DEVICES FOR THE TRANSITION TAPER SEE TABLE 7-5 OMUTCD. FOR A 45-65 MPH PREVAILING SPEED AND A 12 FT. LANE, NOT LESS THAN THIRTEEN (13) DRUMS SHALL BE USED TO FORM THE LANE TRANSITION TAPER IN ADVANCE OF THE WORK AREA. NOT LESS THAN FIVE (5) DRUMS SHALL BE USED TO FORM THE TAPER ON THE SHOULDER. DRUMS SHALL BE SPACED APPROXIMATELY 50' CENTER TO CENTER FOR THE FIRST 1000 FEET OF THE WORK AREA AND AT A MAXIMUM OF 100 TO 120 FEET FOR THE BALANCE OF THE WORK AREA. CONES MAY BE SUBSTITUTED FOR DRUMS FOR SHORT TERM LANE CLOSURES DURING DAYLIGHT HOURS ONLY.

2. THE MAJOR STANDARD LEVEL (36") WARNING SIGNS MAY BE USED ON DIVIDED STREETS OR HIGHWAYS THAT ARE NOT CLASSIFIED AS FREEWAYS OR EXPRESSWAYS.

3. WHEN WORK IS BEING PERFORMED IN THE LANE ADJACENT TO THE MEDIAN ON A DIVIDED HIGHWAY, AN OW-123-48 SIGN(S) SHALL BE SUBSTITUTED FOR THE OW-122-48 SIGN(S) AND AN OW-60D-48 SIGN(S) SHALL BE SUBSTITUTED FOR THE OW-60C-48 SIGN(S).

4. THE WORK VEHICLE SHOWN AT THE BEGINNING OF THE WORK AREA SHALL BE IN PLACE AND UNOCCUPIED WHENEVER WORKERS ARE IN THE WORK AREA. THIS WORK VEHICLE SHALL BE REMOVED FROM THE PAVEMENT WHENEVER WORKERS ARE NOT IN THE WORK AREA. OTHER PROTECTIVE DEVICES MAY BE USED IN LIEU OF THE WORK VEHICLE SHOWN WHEN APPROVED BY THE ENGINEER. THE VEHICLE SHALL BE EQUIPPED WITH A 360° ROTATING OR FLASHING AMBER BEACON CLEARLY VISIBLE FOR A MINIMUM OF ONE-QUARTER (1/4) MILE. A TRUCK MOUNTED IMPACT ATTENUATOR MAY BE EMPLOYED.

5. THE FLASHING ARROW PANEL SHALL MEET THE REQUIREMENTS OF STANDARD DRAWING TC-35.10.

6. TYPE "C" STEADY BURNING BARRICADE WARNING LIGHTS SHALL BE ERECTED ON DRUMS FOR NIGHT LANE CLOSURES. THE MAXIMUM SPACING SHALL BE IDENTICAL TO THE CHANNELIZING DEVICE SPACING REQUIREMENTS DESCRIBED IN NOTE 1.

7. THE TYPE "A" FLASHING BARRICADE WARNING LIGHTS SHOWN ON THE "ROAD CONSTRUCTION AHEAD" AND THE "ONE LANE ROAD AHEAD" SIGNS ARE REQUIRED WHENEVER A NIGHT LANE CLOSURE IS NECESSARY.

8. THE OC-8 SIGNS ARE ONLY REQUIRED FOR LANE CLOSURES OF MORE THAN ONE DAY AND MAY BE OMITTED IF IT FALLS WITHIN THE LIMITS OF A CONSTRUCTION PROJECT.

9. SOME WORK AREA LOCATIONS MAY REQUIRE MORE THAN JUST STATIC OR CONVENTIONAL SIGNS TO ENHANCE COMMUNICATION WITH THE DRIVER. AT THESE LOCATIONS PORTABLE CHANGEABLE MESSAGE SIGNS (PCMS) UNITS ARE RECOMMENDED. THESE DEVICES SHOULD BE LOCATED APPROXIMATELY 2000 FEET IN ADVANCE OF A LANE CLOSURE OR OTHER POINT OF REQUIRED ACTION. SEE SECTION 7G-8.1, OMUTCD FOR FURTHER GUIDANCE ON USE OF PCMS UNITS. THESE UNITS, IF REQUIRED, WILL BE SPECIFICALLY CALLED FOR IN THE PLANS AND PAID FOR SEPARATELY.

10. PAYMENT FOR ALL OF THE ABOVE, UNLESS ITEMIZED SEPARATELY, SHALL BE INCLUDED IN "ITEM 614 - MAINTAINING TRAFFIC".

MINIMUM DISTANCE	A	B	C
	FEET	FEET	FEET
MAJOR STANDARD	500	500	500
URBAN FREEWAY AND EXPRESSWAY	500 to 1000	500 to 1000	500 to 1000
RURAL FREEWAY AND EXPRESSWAY	2600	1600	1000

STATE OF OHIO
DEPARTMENT OF TRANSPORTATION
DISTRICT FIVE

CLOSING ONE LANE of a FOUR-LANE DIVIDED HIGHWAY

REV.	DRAWN	DATE 12/82 STANDARD DRAWING D3-4
10/87		

CALC. BY
DATE 1-3-89
CHECK BY RM
DATE 1-18-89

LIC-37-15.61
LIC-16-14.26

FED. RD. DIVISION	STATE	PROJECT	
5	OHIO		

PLAN NO.

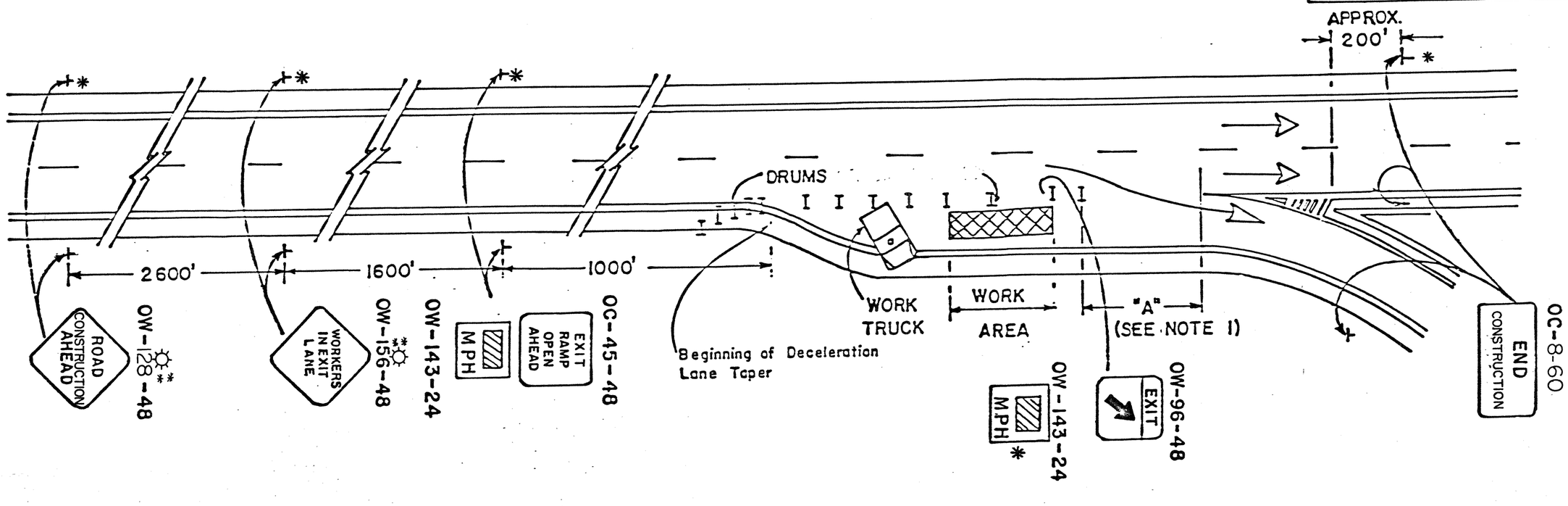

* OPTIONAL SIGN ERECTED WITH THE APPROVAL OF THE ENGINEER.

GENERAL NOTES.

1. THIS WORK AREA TRAFFIC CONTROL APPLICATION SHALL ONLY APPLY WHEN THE DISTANCE "A" IS GREATER THAN 100'. WHEN DISTANCE "A" IS LESS THAN 100', THE RAMP SHALL BE CLOSED. WHEN THE RAMP IS CLOSED, THE TRAFFIC CONTROL SHALL INCLUDE DETOUR SIGNING FOR EXIT RAMP CLOSURES IN ACCORDANCE WITH OMUTCD.

2. DRUMS SHALL BE SPACED AT 50 FOOT CENTERS.

3. TYPE C STEADY BURNING BARRICADE WARNING LIGHTS SHALL BE ERECTED ON ALL DRUMS FOR NIGHT LANE CLOSURES.

4. THE WORK TRUCK SHOWN AT THE BEGINNING OF THE WORK AREA SHALL BE IN PLACE AND UNOCCUPIED WHENEVER MEN ARE WORKING WITHIN THE WORK AREA. THIS TRUCK SHALL BE MOVED FROM THE PAVEMENT WHENEVER WORKMEN ARE NOT IN THE WORK AREA. OTHER PROTECTIVE DEVICES MAY BE USED IN LIEU OF THE WORK TRUCK SHOWN WHEN APPROVED BY THE ENGINEER.⊕

5. THE SPACINGS BETWEEN CONSTRUCTION AND MAINTENANCE SIGNS SHOWN ON THIS DETAIL MAY REQUIRE ADJUSTMENTS (INCREASES OR DECREASES) TO ASSURE THAT THEY ARE POSITIONED NO CLOSER THAN 200 FEET TO EXISTING SIGNS AS DETERMINED BY THE ENGINEER.

** 6. *FOR NIGHT CLOSURES, EACH OF THE FIRST TWO SIGNS IN THE SEQUENCE (ROAD CONST. AHEAD AND WORKERS IN EXIT LANE) IS REQUIRED TO BE SUPPLEMENTED BY A TYPE A FLASHING BARRICADE WARNING LIGHT.*

⊕ 7. *WORK VEHICLES SHALL BE EQUIPPED WITH A 360° ROTATING OR FLASHING AMBER BEACON CLEARLY VISIBLE A MINIMUM OF 1/4 MILE.*

OHIO DEPARTMENT OF TRANSPORTATION

LANE CLOSURE IN DECELERATION LANE

DATE 8-3-79

CALC. BY S.W.
DATE 1-3-89
CHECK. BY JWC
DATE 1-18-89

LIC-37-15.61
LIC-16-14.26

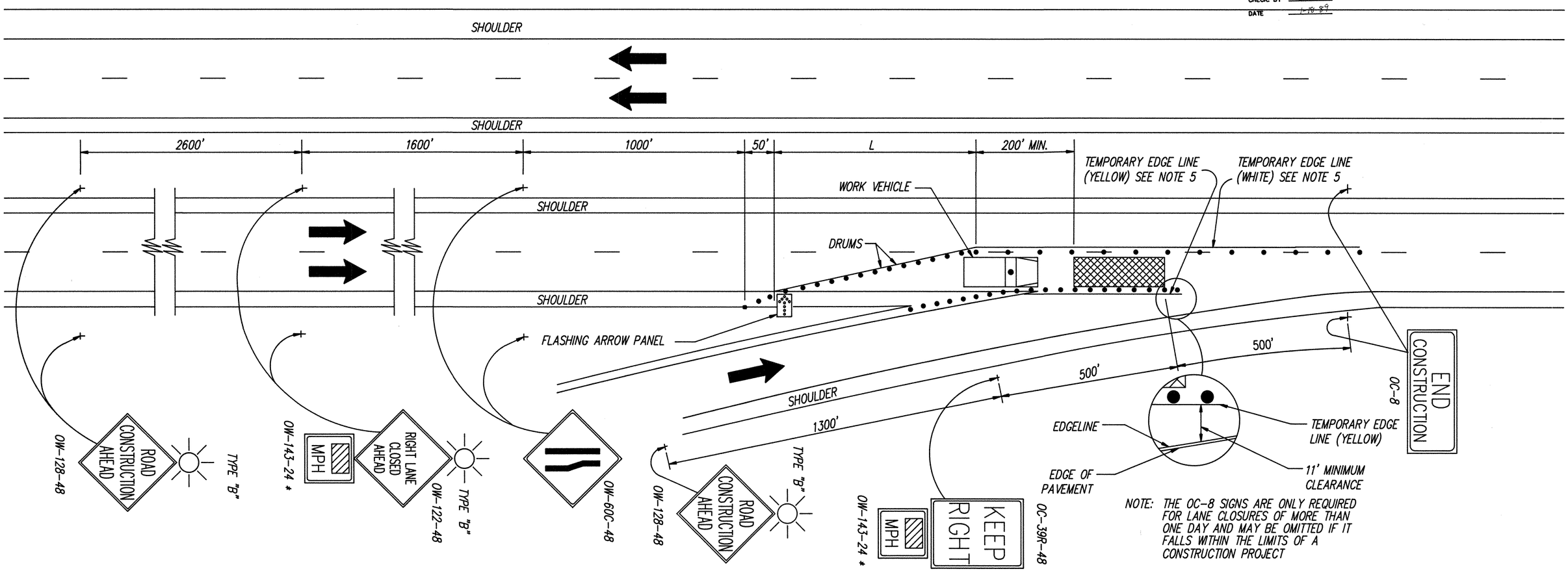

NOTE: THE OC-8 SIGNS ARE ONLY REQUIRED FOR LANE CLOSURES OF MORE THAN ONE DAY AND MAY BE OMITTED IF IT FALLS WITHIN THE LIMITS OF A CONSTRUCTION PROJECT

1. THIS WORK AREA TRAFFIC CONTROL APPLICATION SHALL BE EMPLOYED WHEN THE LATERAL CLEARANCE BETWEEN THE CHANNELIZING DEVICES AT THE RIGHT EDGE OF THE WORK AREA AND THE EDGE OF THE RAMP PAVEMENT IS 11 FEET OR MORE.

2. THE TAPER LENGTH (L) SHALL BE IN ACCORDANCE WITH SECTION 7F-17 OF THE OMUTCD. THE LOCATION OF THE ADVANCE WARNING SIGNS SHOULD BE ADJUSTED TO PROVIDE FOR ADEQUATE SIGHT DISTANCE FOR THE EXISTING VERTICAL AND HORIZONTAL ROADWAY ALIGNMENT. IN ORDER TO DETERMINE THE MINIMUM NUMBER OF CHANNELIZING DEVICES FOR THE TRANSITION TAPER SEE TABLE 7-5 OMUTCD. FOR A 55 MPH PREVAILING SPEED AND A 12 FOOT LANE, NOT LESS THAN THIRTEEN (13) DRUMS SHALL BE USED TO FORM THE LANE TRANSITION TAPER IN ADVANCE OF THE WORK AREA. NOT LESS THAN FIVE (5) DRUMS SHALL BE USED TO FORM THE TAPER IN THE SHOULDER AREA . DRUMS SHALL BE LOCATED AS SHOWN TO SEPARATE THE RAMP TRAFFIC FROM THE WORK AREA. DRUMS SHALL BE SPACED 50' CENTER TO CENTER. CONES HAVING A MINIMUM HEIGHT OF 28 INCES MAY BE SUBSTITUTED FOR DRUMS FOR DAY-TIME LANE CLOSURES. PROVISIONS SHALL BE MADE TO STABILIZE THE CONES TO PREVENT THEM FROM BLOWING OVER. IF THIS CANNOT BE ACHIEVED, DRUMS SHALL BE USED.

3. THE SPACING BETWEEN CONSTRUCTION SIGNS SHOWN ON THIS DETAIL MAY REQUIRE ADJUSTMENTS (INCREASES OR DECREASES) TO ASSURE THAT THEY ARE POSITIONED NO CLOSER THAN 200 FEET TO EXISTING SIGNS OR AS DETERMINED BY THE ENGINEER.

4. RAMP SIGNS SHALL BE DUAL MOUNTED ON MULTILANE RAMPS.

5. IF THE CONSTRUCTION OPERATION REQUIRES THE LANE CLOSURE FOR MORE THAN ONE DAY, THEN THE EXISTING CONFLICTING PAVEMENT MARKINGS AND REFLECTORS FROM THE RAISED PAVEMENT MARKERS SHALL BE REMOVED AND THE APPROPRIATE COLOR TEMPORARY EDGE LINES SHALL BE APPLIED. PAVEMENT MARKING TAPE MAY BE USED. AFTER COMPLETION OF THE WORK, TEMPORARY MARKINGS SHALL BE REMOVED IN ACCORDANCE WITH 621.134 AND THE ORIGINAL MARKINGS AND RAISED PAVEMENT MARKER REFLECTORS SHALL BE RESTORED.

6. THE WORK VEHICLE SHOWN AT THE BEGINNING OF THE WORK AREA SHALL BE IN PLACE AND UNOCCUPIED WHENEVER WORKERS ARE IN THE WORK AREA. THIS WORK VEHICLE SHALL BE MOVED FROM THE PAVEMENT WHENEVER WORKERS ARE NOT IN THE WORK AREA. OTHER PROTECTIVE DEVICES MAY BE USED IN LIEU OF THE WORK VEHICLE SHOWN WHEN APPROVED BY THE ENGINEER. THE VEHICLE SHALL BE EQUIPPED WITH A 360° ROTATING OR FLASHING AMBER BEACON CLEARLY VISIBLE FOR A MINIMUM OF ONE-QUARTER (1/4) MILE. A TRUCK MOUNTED IMPACT ATTENUATOR MAY BE EMPLOYED.

7. THE FLASHING ARROW PANEL SHALL MEET THE REQUIREMENTS OF STANDARD DRAWING TC-35.10.

8. TYPE "C" STEADY BURNING BARRICADE WARNING LIGHTS SHALL BE ERECTED ON DRUMS FOR NIGHT LANE CLOSURES. THE MAXIMUM SPACING SHALL BE IDENTICAL TO THE CHANNELIZING DEVICE SPACING REQUIREMENTS DESCRIBED IN NOTE 2.

9. TYPE "B" FLASHING BARRICADE WARNING LIGHTS SHOWN ON THE "ROAD CONSTRUCTION AHEAD" AND THE "RIGHT LANE CLOSED AHEAD" SIGNS ARE REQUIRED WHENEVER A NIGHT LANE CLOSURE IS NECESSARY.

10. SOME WORK AREA LOCATIONS MAY REQUIRE MORE THAN JUST STATIC OR CONVENTIONAL SIGNS TO ENHANCE COMMUNICATION WITH THE DRIVER. AT THESE LOCATIONS PORTABLE CHANGEABLE MESSAGE SIGNS (PCMS) UNITS ARE RECOMMENDED. THESE DEVICES SHOULD BE LOCATED APPROXIMATELY 2000 FEET IN ADVANCE OF A LANE CLOSURE OR OTHER POINT OF REQUIRED ACTION. SEE SECTION 7G-8.1, OMUTCD FOR FURTHER GUIDANCE ON USE OF PCMS UNITS. THESE UNITS, IF REQUIRED, WILL BE SPECIFICALLY CALLED FOR IN THE PLANS AND PAID FOR SEPARATELY.

11. PAYMENT FOR ALL OF THE ABOVE, UNLESS ITEMIZED SEPARATELY, SHALL BE INCLUDED IN "ITEM 614 – MAINTAINING TRAFFIC".

* OPTIONAL – AS DIRECTED BY THE ENGINEER

STATE OF OHIO
DEPARTMENT OF TRANSPORTATION
DISTRICT FIVE

LANE CLOSURE AT ENTRANCE RAMP: PLAN A

REV.	DRAWN	DATE 7/86
6/87		STANDARD DRAWING D3-7

CALC. BY	DATE	CHECK. BY	DATE	PLAN NO.	FED. RD. DIVISION	STATE	PROJECT
	1-3-89		1-18-89	LIC-37-15.61 LIC-16-14.26	5	OHIO	

**11. For night closures, each of the first two signs in the sequence (ROAD CONSTRUCTION AHEAD and RIGHT LANE CLOSED AHEAD) is required to be supplemented by a Type A flashing barricade warning light.

⊕12. Work vehicles shall be equipped with a 360° rotating or flashing amber beacon clearly visible a minimum of 1/4 mile.

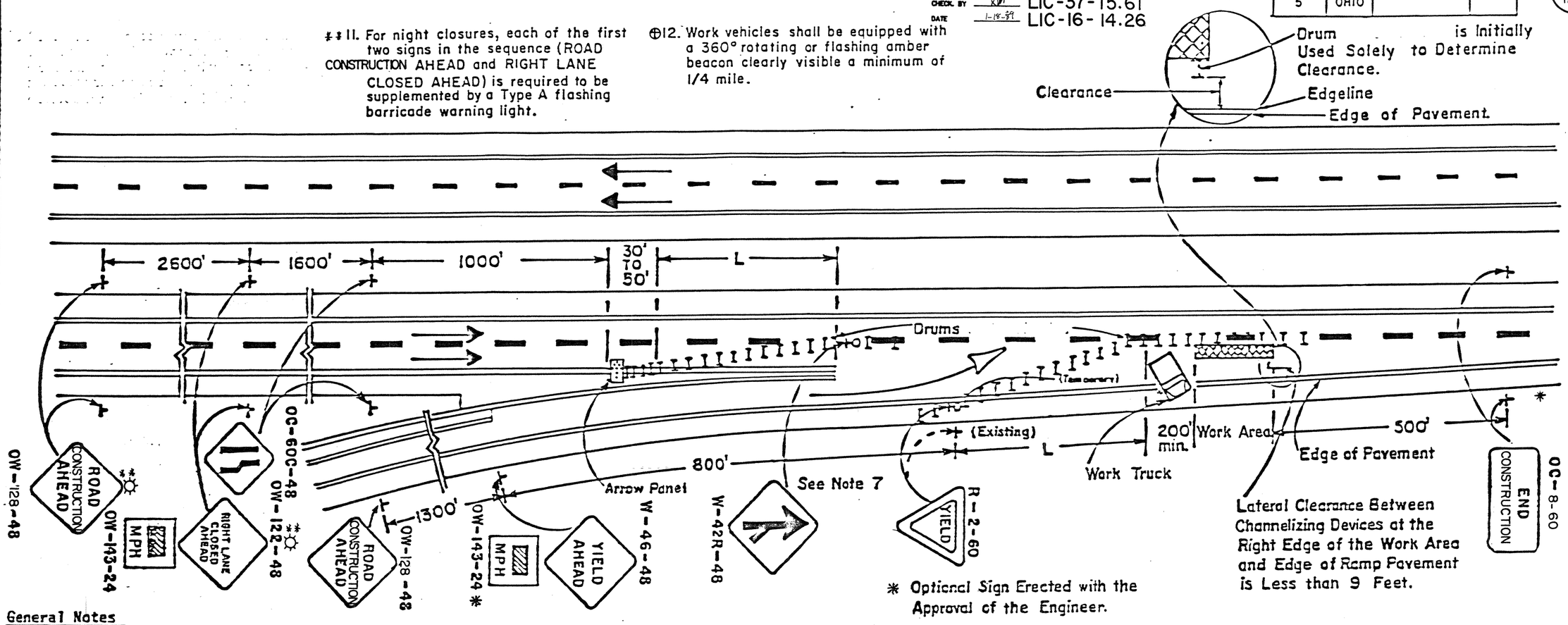

* Optional Sign Erected with the Approval of the Engineer.

General Notes

1. This work area traffic control application shall be employed when the lateral clearance between channelizing devices at the right edge of the work area and the edge of the ramp pavement is less than 9 feet. When the clearance is more than 9 feet, the traffic control on "Lane Closure at Entrance Ramp: Plan A" should be used, or the ramp should be closed. When the ramp is closed, appropriate detour signs shall be provided.

2. Thirteen (13) drums shall be used to form the lane transition taper in advance of the work area. Five (5) channelizing devices shall be used to form the taper on the shoulder. Drums shall be spaced at 50 foot centers.

3. Ramp signs shall be dual mounted on multi-lane ramps. When the ramp is not long enough to allow placement as specified above, the signs may be spaced proportionately within the space available as determined by the Engineer (a 200' minimum spacing must be maintained).

4. The flashing arrow panel shall be in accordance with Std. Drwg. TC-35.10

5. The work truck shown at the beginning of the work area shall be in place and unoccupied whenever men are working within the work area. This truck shall be moved from the pavement whenever workmen are not in the work area. Other protective devices may be used in lieu of work truck shown when approved by the Engineer. ⊕

6. Type C steady burning barricade warning lights shall be erected on ALL DRUMS for night lane closures.

7. It may be necessary to move the location of an existing Yield condition In these cases, the permanent R-2 sign installation shall be covered and the temporary installation shall be mounted upon a drive post which shall be banded to a drum with stainless steel strapping material or other techniques subject to the approval of the Engineer.

8. Taper Formulae:

   $L = S \times W$ for Speeds of 45 or more.
   $L = WS^2/60$ for Speeds 40 or less.

   Where:

   L = Minimum length of taper.
   S = Numerical value of posted speed limit prior to work or 85 percentile speed.
   W = Width of offset.

9. THE SPACINGS BETWEEN CONSTRUCTION AND MAINTENANCE SIGNS SHOWN ON THIS DETAIL MAY REQUIRE ADJUSTMENTS (INCREASES OR DECREASES) TO ASSURE THAT THEY ARE POSITIONED NO CLOSER THAN 200 FEET TO EXISTING SIGNS AS DETERMINED BY THE ENGINEER.

OHIO DEPARTMENT OF TRANSPORTATION

LANE CLOSURE AT ENTRANCE RAMP PLAN B

DATE 3-3-79

7K-6

Rev. EEF 9/84

LIC-37-15.61
LIC-16-14.26

120/123

CALC. BY D.W.
DATE 1-3-89
CHECK. BY KWC
DATE 1-18-89

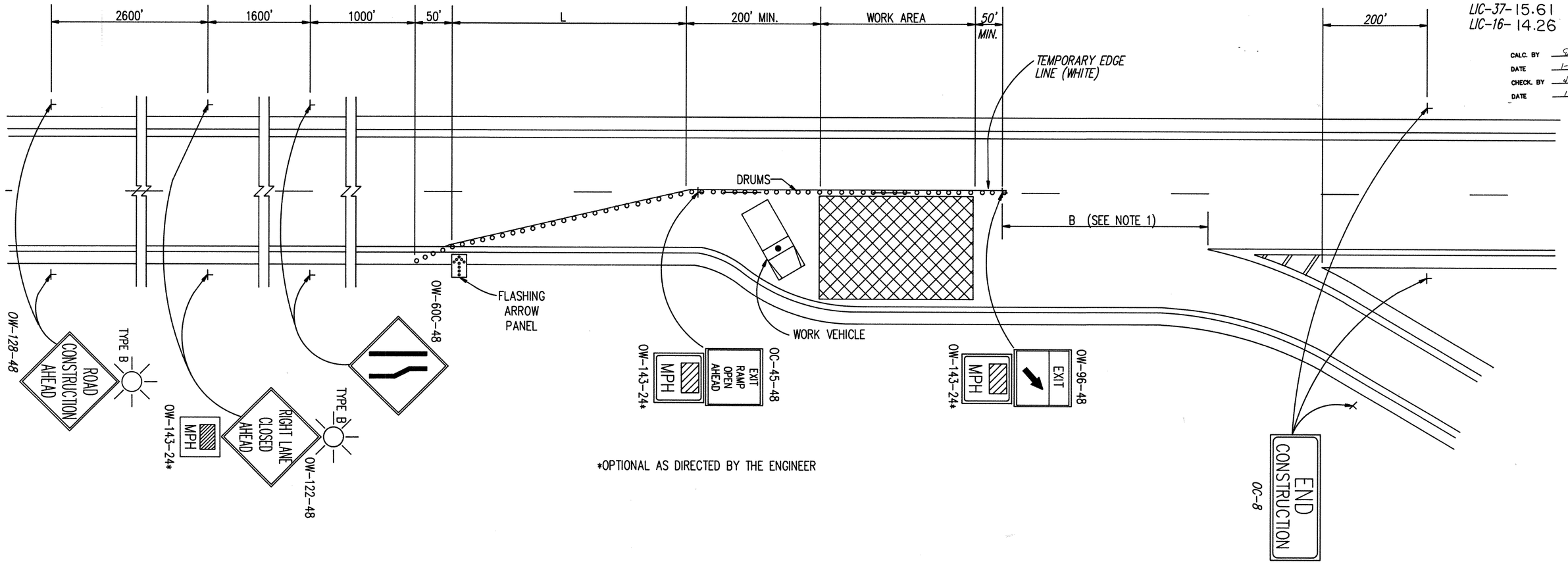

*OPTIONAL AS DIRECTED BY THE ENGINEER

1) THIS WORK AREA TRAFFIC CONTROL APPLICATION SHALL BE USED WHEN THE DISTANCE "B" IS 100 FEET OR GREATER.

2) THE TAPER LENGTH (L) SHALL BE IN ACCORDANCE WITH SECTION 7F-17 OF THE OMUTCD. THE LOCATION OF THE ADVANCE WARNING SIGNS SHOULD BE ADJUSTED TO PROVIDE FOR ADEQUATE SIGHT DISTANCE FOR THE EXISTING VERTICAL AND HORIZONTAL ROADWAY ALIGNMENT. IN ORDER TO DETERMINE THE MINIMUM NUMBER OF CHANNELIZING DEVICES FOR THE TRANSITION TAPER SEE TABLE 7-5 OMUTCD. FOR A 55 MPH PREVAILING SPEED AND A 12 FOOT LANE, NOT LESS THAN THIRTEEN (13) DRUMS SHALL BE USED TO FORM THE LANE TRANSITION TAPER IN ADVANCE OF THE WORK AREA. NOT LESS THAN FIVE (5) DRUMS SHALL BE USED TO FORM THE TAPER IN THE SHOULDER AREA. DRUMS SHALL BE SPACED 50' CENTER TO CENTER. CONES HAVING A MINIMUM HEIGHT OF 28 INCHES MAY BE SUBSTITUTED FOR DRUMS FOR DAYTIME LANE CLOSURES. PROVISIONS SHALL BE MADE TO STABILIZE THE CONES TO PREVENT THEM FROM BLOWING OVER. IF THIS CANNOT BE ACHIEVED, DRUMS SHALL BE USED.

3) THE SPACINGS BETWEEN CONSTRUCTION SIGNS SHOWN ON THIS DETAIL MAY REQUIRE ADJUSTMENTS (INCREASES OR DECREASES) TO ASSURE THAT THEY ARE POSITIONED NO CLOSER THAN 200 FEET TO EXISTING SIGNS OR AS DETERMINED BY THE ENGINEER.

4) IF THE CONSTRUCTION OPERATION REQUIRES THE LANE CLOSURE FOR MORE THAN ONE DAY, THEN THE EXISTING CONFLICTING PAVEMENT MARKINGS AND REFLECTORS FROM THE RAISED PAVEMENT MARKERS SHALL BE REMOVED AND THE APPROPRIATE COLOR TEMPORARY EDGE LINES LINES SHALL BE APPLIED. PAVEMENT MARKING TAPE MAY BE USED. AFTER COMPLETION OF THE WORK, TEMPORARY MARKINGS SHALL BE REMOVED IN ACCORDANCE WITH 621.134 AND THE ORIGINAL MARKINGS AND RAISED PAVEMENT MARKER REFLECTORS SHALL BE RESTORED.

5) THE WORK VEHICLE SHOWN AT THE BEGINNING OF THE WORK AREA SHALL BE IN PLACE AND UNOCCUPIED WHENEVER MEN ARE WORKING WITHIN THE WORK AREA. THIS VEHICLE SHALL BE MOVED FROM THE PAVEMENT WHENEVER WORKMEN ARE NOT IN THE WORK AREA. OTHER PROTECTIVE DEVICES MAY BE USED IN LIEU OF THE WORK VEHICLE SHOWN WHEN APPROVED BY THE ENGINEER. THE VEHICLE SHALL BE EQUIPPED WITH A 360° ROTATING OR FLASHING AMBER BEACON CLEARLY VISIBLE FOR A MINIMUM OF ONE-QUARTER (1/4) MILE. A TRUCK MOUNTED IMPACT ATTENUATOR MAY BE EMPLOYED.

6) THE FLASHING ARROW PANEL SHALL MEET THE REQUIREMENTS OF STANDARD DRAWING TC-35.10.

7) TYPE C STEADY BURN BARRICADE WARNING LIGHTS SHALL BE ERECTED ON THE DRUMS FOR NIGHT LANE CLOSURES. THE MAXIMUM SPACING SHALL BE IDENTICAL TO THE CHANNELIZING DEVICE SPACING REQUIREMENTS DESCRIBED IN NOTE NO. 2.

8) THE TYPE B FLASHING BARRICADE WARNING LIGHTS SHOWN ON THE "ROAD CONSTRUCTION AHEAD" AND THE "ONE LANE ROAD AHEAD" SIGNS ARE REQUIRED WHENEVER A NIGHT LANE CLOSURE IS NECESSARY.

9) THE OC-8 SIGNS ARE ONLY REQUIRED FOR LANE CLOSURES OF MORE THAN ONE DAY AND MAY BE OMITTED IF THEY FALL WITHIN THE LIMITS OF A CONSTRUCTION PROJECT.

10) SOME WORK AREA LOCATIONS MAY REQUIRE MORE THAN JUST STATIC OR CONVENTIONAL SIGNS TO ENHANCE COMMUNICATION WITH THE DRIVER. AT THESE LOCATIONS PORTABLE CHANGEABLE MESSAGE SIGNS (PCMS) UNITS ARE RECOMMENDED. THESE DEVICES SHOULD BE LOCATED APPROXIMATELY 2,000 FEET IN ADVANCE OF A LANE CLOSURE OR OTHER POINT OF REQUIRED ACTION. SEE SECTION 7G-8.1, OMUTCD FOR FURTHER GUIDANCE ON USE OF PCMS UNITS. THSE UNITS, IF REQUIRED, WILL BE SPECIFICALLY CALLED FOR IN THE PLANS AND PAID FOR SEPARATELY.

11) PAYMENT FOR ALL OF THE ABOVE, UNLESS ITEMIZED SEPARATELY, SHALL BE INCLUDED IN ITEM 614, MAINTAINING TRAFFIC.

STATE OF OHIO
DEPARTMENT OF TRANSPORTATION
DISTRICT FIVE

LANE CLOSURE BEFORE EXIT GORE

REV.	DRAWN	
6/87		STANDARD NO. D3-8

LIC-37-15.61
LIC-16-14.26

FED. RD. DIVISION	STATE	PROJECT	
5	OHIO		

PLAN NO.

CALC. BY D.M.
DATE 1-3-89
CHECK. BY RM
DATE 1-18-89

*11. For night closures, each of the first two signs in the sequence (ROAD CONSTRUCTION AHEAD and RIGHT LANE CLOSED AHEAD) is required to be supplemented by a Type A flashing barricade warning light.

⊕12. Work vehicles shall be equipped with a 360° rotating or flashing amber beacon clearly visible a minimum of 1/4 mile.

(See Note 8)

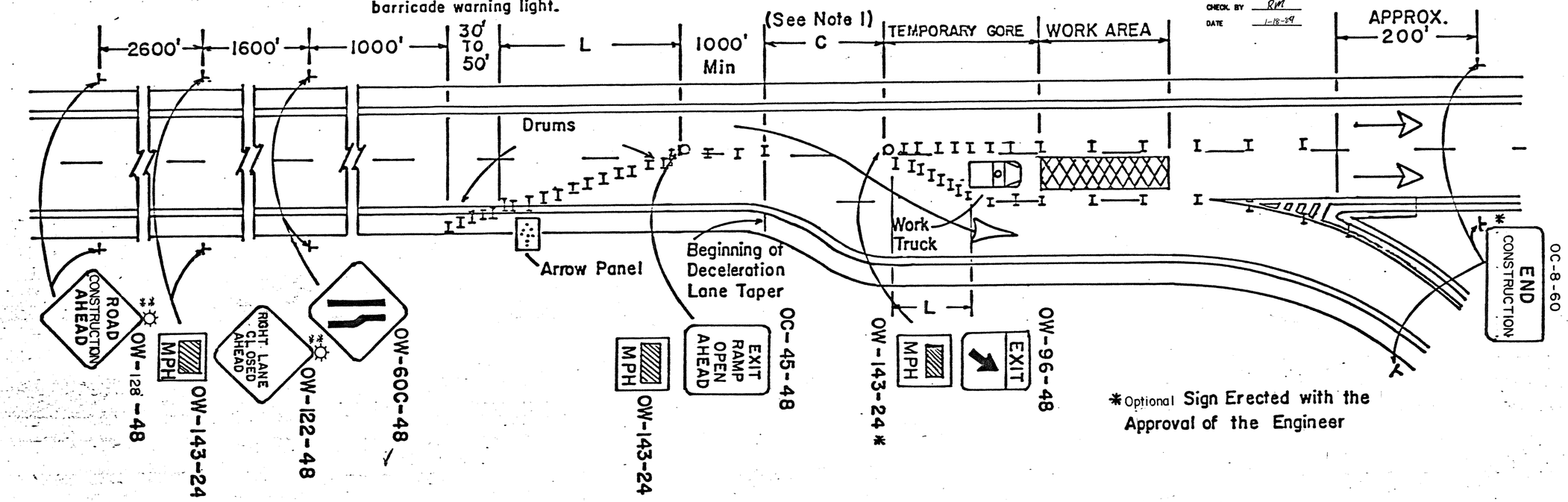

*Optional Sign Erected with the Approval of the Engineer

GENERAL NOTES

1. THIS WORK AREA TRAFFIC CONTROL APPLICATION SHALL ONLY BE USED WHEN THE DISTANCE "C" IS 100 FEET OR GREATER. WHEN "C" IS LESS THAN 100 FEET, THE TRAFFIC CONTROL SHOWN ON THE "LANE CLOSURE BEFORE EXIT GORE" DETAIL SHOULD BE USED, OR THE EXIT SHOULD BE CLOSED, OR THE TRAFFIC CONTROL ON THIS DRAWING MAY BE USED WITH APPROVAL OF THE ENGINEER. WHEN THE EXIT IS CLOSED, APPROPRIATE DETOUR SIGNS SHALL BE PROVIDED.

2. WHEN WORK IS BEING PERFORMED IN ONLY THE LANE ADJACENT TO THE MEDIAN ON A DIVIDED HIGHWAY, REFER TO THE TYPICAL WORK AREA TRAFFIC CONTROL SHOWN IN FIGURE C-21 OF THE OHIO MANUAL OF UNIFORM TRAFFIC CONTROL DEVICES.

3. THE WORK TRUCK SHOWN AT THE BEGINNING OF THE WORK AREA SHALL BE IN PLACE AND UNOCCUPIED WHENEVER MEN ARE WORKING WITHIN THE WORK AREA. THIS TRUCK SHALL BE MOVED FROM THE PAVEMENT WHENEVER WORKMEN ARE NOT IN THE WORK AREA. OTHER PROTECTIVE DEVICES MAY BE USED IN LIEU OF THE WORK TRUCK SHOWN WHEN APPROVED BY THE ENGINEER. A TRUCK MOUNTED IMPACT ATTENUATOR MAY BE EMPLOYED.⊕

4. THE FLASHING ARROW PANEL SHALL BE IN ACCORDANCE WITH STD. DRWG. TC-35.10.

5. THIRTEEN (13) DRUMS SHALL BE USED TO FORM THE LANE TRANSITION TAPER IN ADVANCE OF THE WORK AREA. FIVE (5) CHANNELIZING DEVICES SHALL BE USED TO FORM THE TAPER ON THE SHOULDER. DRUMS SHALL BE SPACED AT 50 FOOT CENTERS.

6. TYPE C STEADY BURNING BARRICADE WARNING LIGHTS SHALL BE ERECTED ON ALL DRUMS FOR NIGHT LANE CLOSURES.

7. TAPER FORMULAE:

$L = S \times W$ FOR SPEEDS OF 45 OR MORE.
$L = WS^2/60$ FOR SPEEDS OF 40 OR LESS.

WHERE:

L = MINIMUM LENGTH OF TAPER.
S = NUMERICAL VALUE OF POSTED SPEED LIMIT PRIOR TO WORK OR 85 PERCENTILE SPEED.
W = WIDTH OF OFFSET.

8. WHEN CREATING A TEMPORARY GORE, CHANNELIZING DEVICES SHOULD BE SPACED 25' CENTER TO CENTER SO AS TO CREATE A "SOLID GORE" EFFECT.

9. THE SPACINGS BETWEEN CONSTRUCTION AND MAINTENANCE SIGNS SHOWN ON THIS DETAIL MAY REQUIRE ADJUSTMENTS (INCREASES OR DECREASES) TO ASSURE THAT THEY ARE POSITIONED NO CLOSER THAN 200 FEET TO EXISTING SIGNS AS DETERMINED BY THE ENGINEER.

OHIO DEPARTMENT OF TRANSPORTATION

LANE CLOSURE AT EXIT GORE

DATE 8-3-79

7K-4

Rev. EEF 9/84

CALC. BY	
DATE	1-3-89
CHECK. BY	
DATE	1-18-89

LIC-37-15.61
LIC-16-14.26

FED. RDI DIVISION	STATE	PROJECT	
5	OHIO		

122
123

PLAN NO.

ENTRANCE GORE TRAFFIC CONTROL

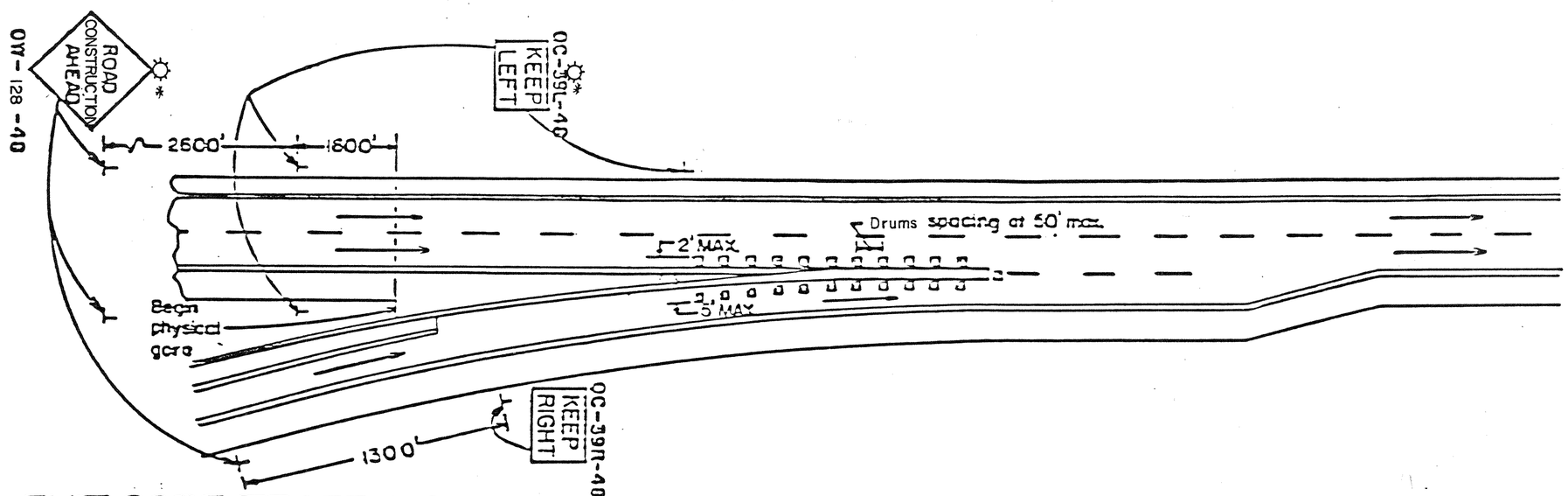

EXIT GORE TRAFFIC CONTROL

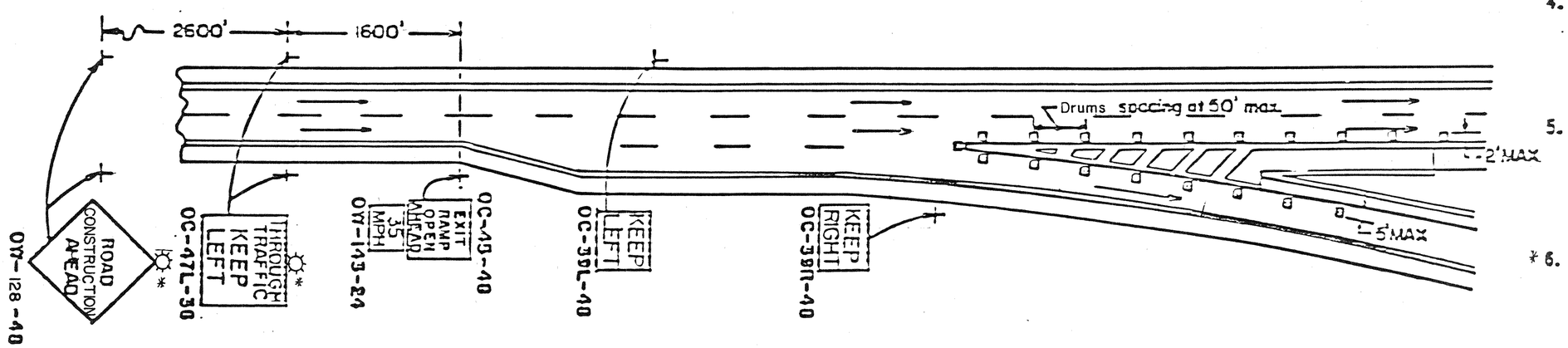

GENERAL NOTE

1. THE REQUIREMENTS OF THE "TRAFFIC CONTROL FOR LONG LINE PAVEMENT MARKING OPERATIONS" Std. Drwg. MT-99.20 SHALL APPLY IN LIEU OF THIS DETAIL WHERE EDGE LINES AND/OR CHANNELIZING LINES ARE SPRAYED IN MOVING OPERATIONS SEPARATE FROM ANY OTHER WORK.

2. WHERE THE WORK IN THE GORE AREA REQUIRES MORE POSITIVE TRAFFIC CONTROL OR OVERNIGHT WORK AREA PROTECTION, THE TRAFFIC CONTROL FOR "LANE CLOSURE AT THE ENTRANCE RAMP" OR "LANE CLOSURE AT EXIT GORE" SHOULD BE EMPLOYED. SEE SHEETS 118-121.

3. THE SPACING BETWEEN SIGNS SHOWN ON THIS DETAIL MAY BE ADJUSTED (INCREASED OR DECREASED) WITH THE APPROVAL OF THE ENGINEER TO POSITION THEM NO CLOSER THAN 200 FEET TO EXISTING SIGNS WHICH MUST REMAIN IN USE.

4. AT AN ISOLATED ENTRANCE GORE AREA, A FLASHING ARROW PANEL CONFORMING TO REQUIREMENTS IN STD. DRWG. TC-35.10 MAY BE SUBSTITUTED FOR THE ADVANCE OC-39-48 SIGNS.

5. AT AN INTERCHANGE WHERE BOTH EXITS AND ENTRANCES ARE MARKED WITH TRAFFIC CONTROL IN PLACE AT THE SAME TIME, THE OW-128-48 SIGN ON THE ENTRANCE RAMP IS NOT REQUIRED.

*6. FOR NIGHT CLOSURES. SIGNS SHALL BE LIGHTED USING TYPE A FLASHING BARRICADE WARNING LIGHT.

7. Cones may be substituted for drums during daylight hours only.

OHIO DEPARTMENT OF TRANSPORTATION

TRAFFIC CONTROL FOR WORK IN GORE AREAS

DATE 1/81

DR JDL CK. CDR

Rev. EEF PM 10/85

7I-2